TOSHIBA

Carrier

FILE No. A10-020-1

REVISION 1 : Mar.2012
Re-edit version.(file volume down)
Contents have NOT been changed.

AIR CONDITIONER (MULTI TYPE)

SERVICE MANUAL

Outdoor Unit

<SUPER MODULAR MULTI SYSTEM-i>

Model name:

<Heat Pump Model>

MMY-MAP0724HT9UL
MMY-MAP0964HT9UL
MMY-MAP1144HT9UL

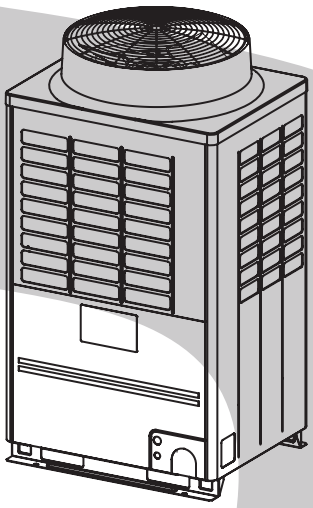

PRINTED IN JAPAN, Mar, 2011, TDOC

Contents

Generic Denomination: Air Conditioner 4

New Refrigerant (R410A). 14

1 Specifications 16

2 Wiring Diagrams 18

2-1. Outdoor unit 18

3 Parts Rating 20

3-1. Outdoor unit 20

3-2. Outdoor inverter 21

3-3. Parts layout in outdoor unit 22

3-4. Parts layout in inverter assembly 24

3-5. Outdoor (inverter) print circuit board 26

3-5-1. Interface P.C. board (MCC-1606) 26

3-5-2. Inverter P.C. board for compressor (MCC-1595) A3-IPDU 27

3-5-3. Inverter P.C. board for fan (MCC-1610) 28

4 Refrigerant Piping Systematic Drawing 29

5 Combined Refrigerant Piping System Schematic Diagrams. 32

5-1. Normal operation (COOL mode / DEFROST mode) - high outside air temperature (roughly 68 °F (20 °C) or above) 32

5-2. Normal operation (COOL mode) - low outside air temperature (roughly below 68 °F (20 °C)) . . 33

5-3. Normal operation (HEAT mode) 34

5-4. Emergency operation (cooling operation under header outdoor unit backup scenario) 35

5-5. Emergency operation (heating operation under header outdoor unit backup scenario) 36

5-6. Refrigerant recovery from failed outdoor unit (pump-down operation under follower outdoor unit backup scenario) 37

6 Control Outline. 38

7 Applied Control and Functions 47

7-1. Applied control for outdoor unit 47

7-1-1. Outdoor fan high static pressure shift. 47

7-1-2. Priority operation mode setting. 47

7-2. Applied control of outdoor unit 49

7-2-1. Power peak-cut control (standard) 50

7-2-2. Power peak-cut control (extended) 51

7-2-3. Snowfall fan control 52

7-2-4. External master ON/OFF control 52

7-2-5. Night operation (sound reduction) control 53

7-2-6. Operation mode selection control. 54

7-2-7. Error/operation output 55
7-2-8. Compressor operation output 56
7-2-9. Operating rate output 57

8 Test Operation 58

8-1. Procedure and summary of test operation 58
8-2. Check items before test operation (before powering-on). 59
8-3. Check at main power-on 63
8-4. Address setup 64
8-4-1. Precautions 64
8-4-2. Address setup and check procedure 64
8-4-3. Address setup procedure 65
8-4-4. Check after address setup when central control system is connected. 78
8-5. Troubleshooting in test operation 79
8-5-1. A check code is displayed on the remote control 79
8-5-2. Operation from the indoor remote control is not accepted, and a check code is displayed on the 7-segment display of the interface PC board of the header unit. 80
8-5-3. There is no display of a check code on the 7-segment display on the interface PC board of the header unit, although there is indoor unit that is not accepting operation from the indoor remote control. 80
8-5-4. In checking the number of connected outdoor units and connected indoor units after address setup, a lower number of connected units is displayed. (There are outdoor/indoor units that do not operate in a test operation.). 81
8-6. Test operation check 83
8-6-1. Fan check. 83
8-6-2. Cooling/heating test operation check 84
8-7. Service support function 88
8-7-1. Check function for connecting of refrigerant and control lines 88
8-7-2. Function to start/stop (ON/OFF) indoor unit from outdoor unit. 90
8-7-3. Error clearing function 95
8-7-4. Remote control distinction function 97
8-7-5. Pulse motor valve (PMV) forced open/close function in indoor unit. 98
8-7-6. Pulse motor valve (PMV) forced open fully/close fully function in outdoor unit 98
8-7-7. Solenoid valve forced open/close function in outdoor unit 99
8-7-8. Fan operation check in outdoor unit. 100
8-7-9. Abnormal outdoor unit discrimination method by fan operating function 101
8-7-10. Manual adjustment function of outside temperature (TO) sensor 102
8-7-11. Monitor function of remote control switch. 104

9 Troubleshooting 106

9-1. Overview 106
9-2. Troubleshooting method 107
9-3. Troubleshooting based on information displayed on remote control 113
9-4. Check codes displayed on remote control and SMMS-i outdoor unit (7-segment display on I/F board) and locations to be checked. 117

9-5. Diagnosis procedure for each check code 131
9-6. 7-segment display function 162
9-7. Oil level judgment display 168
9-8. Leakage/clogging of refrigerating cycle circuit 169
9-9. Sensor characteristics 173
9-10. Pressure sensor output check 176

10 Backup Operation (Emergency Operation) 178

10-1. Note for backup operation 178
10-2. Compressor backup operation setting 179
10-3. Outdoor unit backup operation setting 180
10-3-1. Follower outdoor unit backup operation setting (failure of follower outdoor unit) 180
10-3-2. Header outdoor unit backup operation setting (failure of header outdoor unit) 182
10-4. Cooling-season outdoor unit backup operation setting 184

11 Outdoor Unit Refrigerant Recovery Method 185

11-1. Refrigerant recovery from failed outdoor unit (pump-down) 185
11-1-1. Note for refrigerant recovery operation 185
11-1-2. Refrigerant recovery procedure A (case of no outdoor unit backup operation setting) 185
11-1-3. Refrigerant recovery procedure B (case of outdoor unit backup operation setting) . . . 188
11-2. How to operate system while failed outdoor unit being repaired 190
11-3. Work procedure after repair 191

12 Replacing Compressors 192

12-1. Compressor replacement procedure (outline) 192
12-2. Replacement of compressors 193
12-3. Check procedure to search cause of compressor oil shortage 197

13 Outdoor Unit Parts Replacement Methods 200

14 P.C. Board Exchange Procedures 217

14-1. Replacement of outdoor P.C.board 217
14-1-1. List of service P.C. boards 217
14-1-2. Configuration of inverter assembly 217
14-1-3. Interface board replacement procedure 218
14-1-4. Compressor IPDU replacement procedure 219
14-1-5. Fan IPDU P.C. board (MCC-1610) replacement procedure 221
14-1-6. Noise filter P.C. board (MCC-1608 A, B) replacement procedure 222

15 Exploded Diagram / Parts Price List 225

Generic Denomination: Air Conditioner

Definition of Qualified Installer or Qualified Service Person

The air conditioner must be installed, maintained, repaired and removed by a qualified installer or qualified service person. When any of these jobs is to be done, ask a qualified installer or qualified service person to do them for you.

Definition of Protective Gear

When the air conditioner is to be transported, installed, maintained, repaired or removed, wear protective gloves and 'safety' work clothing.
In addition to such normal protective gear, wear the protective gear described below when undertaking the special work detailed in the table below.
Failure to wear the proper protective gear is dangerous because you will be more susceptible to injury, burns, electric shocks and other injuries.

Work undertaken	Protective gear worn
All types of work	Protective gloves 'Safety' working clothing
Electrical-related work	Gloves to provide protection for electricians and from heat Insulating shoes Clothing to provide protection from electric shock
Work done at heights (50 cm or more)	Helmets for use in industry
Transportation of heavy objects	Shoes with additional protective toe cap
Repair of outdoor unit	Gloves to provide protection for electricians and from heat

The important contents concerned to the safety are described on the product itself and on this Service Manual. Please read this Service Manual after understanding the described items thoroughly in the following contents (Indications/Illustrated marks), and keep them.

[Explanation of indications]

Indication	Explanation
⚠ **DANGER**	Indicates contents assumed that an imminent danger causing a death or serious injury of the repair engineers and the third parties when an incorrect work has been executed.
⚠ **WARNING**	Indicates possibilities assumed that a danger causing a death or serious injury of the repair engineers, the third parties, and the users due to troubles of the product after work when an incorrect work has been executed.
⚠ **CAUTION**	Indicates contents assumed that an injury or property damage (*) may be caused on the repair engineers, the third parties, and the users due to troubles of the product after work when an incorrect work has been executed.

* Property damage: Enlarged damage concerned to property, furniture, and domestic animal/pet

[Explanation of illustrated marks]

Mark	Explanation
⃠	Indicates prohibited items (Forbidden items to do) The sentences near an illustrated mark describe the concrete prohibited contents.
●	Indicates mandatory items (Compulsory items to do) The sentences near an illustrated mark describe the concrete mandatory contents.
△	Indicates cautions (Including danger/warning) The sentences or illustration near or in an illustrated mark describe the concrete cautious contents.

Warning Indications on the Air Conditioner Unit

[Confirmation of warning label on the main unit]
Confirm that labels are indicated on the specified positions
If removing the label during parts replace, stick it as the original.

Warning indication	Description
	WARNING **ELECTRICAL SHOCK HAZARD** Disconnect all remote electric power supplies before servicing.
	CAUTION High temperature parts. You might get burned when removing this panel.

Precautions for Safety

The manufacturer shall not assume any liability for the damage caused by not observing the description of this manual.

⚠ DANGER

Turn off breaker.	Before carrying out the installation, maintenance, repair or removal work, be sure to set the circuit breaker for both the indoor and outdoor units to the OFF position. Otherwise, electric shocks may result.
	Before opening the intake grille of the indoor unit or service panel of the outdoor unit, set the circuit breaker to the OFF position. Failure to set the circuit breaker to the OFF position may result in electric shocks through contact with the interior parts. Only a qualified installer (*1) or qualified service person (*1) is allowed to remove the intake grille of the indoor unit or service panel of the outdoor unit and do the work required.
	Before starting to repair the outdoor unit fan or fan guard, be absolutely sure to set the circuit breaker to the OFF position, and place a “Work in progress” sign on the circuit breaker.
	When cleaning the filter or other parts of the indoor unit, set the circuit breaker to OFF without fail, and place a “Work in progress” sign near the circuit breaker before proceeding with the work.
	When you have noticed that some kind of trouble (such as when an error display has appeared, there is a smell of burning, abnormal sounds are heard, the air conditioner fails to cool or heat or water is leaking) has occurred in the air conditioner, do not touch the air conditioner yourself but set the circuit breaker to the OFF position, and contact a qualified service person. Take steps to ensure that the power will not be turned on (by marking “out of service” near the circuit breaker, for instance) until qualified service person arrives. Continuing to use the air conditioner in the trouble status may cause mechanical problems to escalate or result in electric shocks or other failure.
Electric shock hazard	When you access inside of the service panel to repair electric parts, wait for about five minutes after turning off the breaker. Do not start repairing immediately.Otherwise you may get electric shock by touching terminals of high-voltage capacitors. Natural discharge of the capacitor takes about five minutes.
Prohibition	Place a “Work in progress” sign near the circuit breaker while the installation, maintenance, repair or removal work is being carried out. There is a danger of electric shocks if the circuit breaker is set to ON by mistake.
	Before operating the air conditioner after having completed the work, check that the electrical parts box cover of the indoor unit and service panel of the outdoor unit are closed, and set the circuit breaker to the ON position. You may receive an electric shock if the power is turned on without first conducting these checks.
Stay on protection	If, in the course of carrying out repairs, it becomes absolutely necessary to check out the electrical parts with the electrical parts box cover of one or more of the indoor units and the service panel of the outdoor unit removed in order to find out exactly where the trouble lies, wear insulated heat-resistant gloves, insulated boots and insulated work overalls, and take care to avoid touching any live parts. You may receive an electric shock if you fail to heed this warning. Only qualified service person (*1) is allowed to do this kind of work.

⚠ WARNING

General	Before starting to repair the air conditioner, read carefully through the Service Manual, and repair the air conditioner by following its instructions.
	Only qualified service person (*1) is allowed to repair the air conditioner. Repair of the air conditioner by unqualified person may give rise to a fire, electric shocks, injury, water leaks and/or other problems.
	Do not use any refrigerant different from the one specified for complement or replacement. Otherwise, abnormally high pressure may be generated in the refrigeration cycle, which may result in a failure or explosion of the product or an injury to your body.
	Only a qualified installer (*1) or qualified service person (*1) is allowed to carry out the electrical work of the air conditioner. Under no circumstances must this work be done by an unqualified individual since failure to carry out the work properly may result in electric shocks and/or electrical leaks.
	When transporting the air conditioner, wear shoes with protective toe caps, protective gloves and other protective clothing.
	When connecting the electrical wires, repairing the electrical parts or undertaking other electrical jobs, wear gloves to provide protection for electricians and from heat, insulating shoes and clothing to provide protection from electric shocks. Failure to wear this protective gear may result in electric shocks.
	Electrical wiring work shall be conducted according to law and regulation in the community and installation manual. Failure to do so may result in electrocution or short circuit.
	Only a qualified installer (*1) or qualified service person (*1) is allowed to undertake work at heights using a stand of 19.7 in (50 cm) or more or to remove the intake grille of the indoor unit to undertake work.
	When working at heights, use a ladder which complies with the ISO 14122 standard, and follow the procedure in the ladder's instructions. Also wear a helmet for use in industry as protective gear to undertake the work.
	When working at heights, put a sign in place so that no-one will approach the work location, before proceeding with the work. Parts and other objects may fall from above, possibly injuring a person below.
	When executing address setting, test run, or troubleshooting through the checking window on the electric parts box, put on insulated gloves to provide protection from electric shock. Otherwise you may receive an electric shock.
	Do not touch the aluminum fin of the outdoor unit. You may injure yourself if you do so. If the fin must be touched for some reason, first put on protective gloves and safety work clothing, and then proceed.
	Do not climb onto or place objects on top of the outdoor unit. You may fall or the objects may fall off of the outdoor unit and result in injury.
	When transporting the air conditioner, wear shoes with additional protective toe caps.
	When transporting the air conditioner, do not take hold of the bands around the packing carton. You may injure yourself if the bands should break.
	Be sure that a heavy unit (10kg or heavier) such as a compressor is carried by two persons.
Check earth wires.	Before troubleshooting or repair work, check the earth wire is connected to the earth terminals of the main unit, otherwise an electric shock is caused when a leak occurs.If the earth wire is not correctly connected, contact an electric engineer for rework.
	After completing the repair or relocation work, check that the ground wires are connected properly.
	Be sure to connect earth wire. (Grounding work) Incomplete grounding causes an electric shock. Do not connect ground wires to gas pipes, water pipes, and lightning rods or ground wires for telephone wires.
Prohibition of modification.	Do not modify the products.Do not also disassemble or modify the parts. It may cause a fire, electric shock or injury.
Use specified parts.	When any of the electrical parts are to be replaced, ensure that the replacement parts satisfy the specifications given in the Service Manual (or use the parts contained on the parts list in the Service Manual). Use of any parts which do not satisfy the required specifications may give rise to electric shocks, smoking and/or a fire.

Do not bring a child close to the equipment.	If, in the course of carrying out repairs, it becomes absolutely necessary to check out the electrical parts with the electrical parts box cover of one or more of the indoor units and the service panel of the outdoor unit removed in order to find out exactly where the trouble lies, put a sign in place so that no-one will approach the work location before proceeding with the work. Third-party individuals may enter the work site and receive electric shocks if this warning is not heeded.
Insulating measures	Connect the cut-off lead wires with crimp contact, etc., put the closed end side upward and then apply a water-cut method, otherwise a leak or production of fire is caused at the users' side.
No fire	When performing repairs using a gas burner, replace the refrigerant with nitrogen gas because the oil that coats the pipes may otherwise burn. When repairing the refrigerating cycle, take the following measures. 1) Be attentive to fire around the cycle. When using a gas stove, etc., be sure to put out fire before work; otherwise the oil mixed with refrigerant gas may catch fire. 2) Do not use a welder in the closed room. When using it without ventilation, carbon monoxide poisoning may be caused. 3) Do not bring inflammables close to the refrigerant cycle, otherwise fire of the welder may catch the inflammables.
Refrigerant	The refrigerant used by this air conditioner is the R410A.
	Check the used refrigerant name and use tools and materials of the parts which match with it. For the products which use R410A refrigerant, the refrigerant name is indicated at a position on the outdoor unit where is easy to see. To prevent miss-charging, the route of the service port is changed from one of the former R22.
	For an air conditioner which uses R410A, never use other refrigerant than R410A. For an air conditioner which uses other refrigerant (R22, etc.), never use R410A. If different types of refrigerant are mixed, abnormal high pressure generates in the refrigerating cycle and an injury due to breakage may be caused.
	When the air conditioner has been installed or relocated, follow the instructions in the Installation Manual and purge the air completely so that no gases other than the refrigerant will be mixed in the refrigerating cycle. Failure to purge the air completely may cause the air conditioner to malfunction.
	Do not charge refrigerant additionally. If charging refrigerant additionally when refrigerant gas leaks, the refrigerant composition in the refrigerating cycle changes resulted in change of air conditioner characteristics or refrigerant over the specified standard amount is charged and an abnormal high pressure is applied to the inside of the refrigerating cycle resulted in cause of breakage or injury. Therefore if the refrigerant gas leaks, recover the refrigerant in the air conditioner, execute vacuuming, and then newly recharge the specified amount of liquid refrigerant. In this time, never charge the refrigerant over the specified amount.
	When recharging the refrigerant in the refrigerating cycle, do not mix the refrigerant or air other than R410A into the specified refrigerant. If air or others is mixed with the refrigerant, abnormal high pressure generates in the refrigerating cycle resulted in cause of injury due to breakage.
	After installation work, check the refrigerant gas does not leak. If the refrigerant gas leaks in the room, poisonous gas generates when gas touches to fire such as fan heater, stove or cocking stove though the refrigerant gas itself is innocuous.
	Never recover the refrigerant into the outdoor unit. When the equipment is moved or repaired, be sure to recover the refrigerant with recovering device. The refrigerant cannot be recovered in the outdoor unit; otherwise a serious accident such as breakage or injury is caused.
Assembly/ Wiring	After repair work, surely assemble the disassembled parts, and connect and lead the removed wires as before. Perform the work so that the cabinet or panel does not catch the inner wires. If incorrect assembly or incorrect wire connection was done, a disaster such as a leak or fire is caused at user's side.
Insulator check	After the work has finished, be sure to use an insulation tester set (500V Megger) to check the resistance is 1MΩ or more between the charge section and the non-charge metal section (Earth position). If the resistance value is low, a disaster such as a leak or electric shock is caused at user's side.
Ventilation	When the refrigerant gas leaks during work, execute ventilation. If the refrigerant gas touches to a fire, poisonous gas generates. A case of leakage of the refrigerant and the closed room full with gas is dangerous because a shortage of oxygen occurs. Be sure to execute ventilation.

Compulsion	When the refrigerant gas leaks, find up the leaked position and repair it surely. If the leaked position cannot be found up and the repair work is interrupted, pump-down and tighten the service valve, otherwise the refrigerant gas may leak into the room. The poisonous gas generates when gas touches to fire such as fan heater, stove or cocking stove though the refrigerant gas itself is innocuous. When installing equipment which includes a large amount of charged refrigerant such as a multi air conditioner in a sub-room, it is necessary that the density does not the limit even if the refrigerant leaks. If the refrigerant leaks and exceeds the limit density, an accident of shortage of oxygen is caused.
	Tighten the flare nut with a torque wrench in the specified manner. Excessive tighten of the flare nut may cause a crack in the flare nut after a long period, which may result in refrigerant leakage.
	Nitrogen gas must be used for the airtight test.
	The charge hose must be connected in such a way that it is not slack.
	For the installation/moving/reinstallation work, follow to the Installation Manual. If an incorrect installation is done, a trouble of the refrigerating cycle, water leak, electric shock or fire is caused.
Check after repair	Once the repair work has been completed, check for refrigerant leaks, and check the insulation resistance and water drainage. Then perform a trial run to check that the air conditioner is running properly.
	After repair work has finished, check there is no trouble. If check is not executed, a fire, electric shock or injury may be caused. For a check, turn off the power breaker.
	After repair work (installation of front panel and cabinet) has finished, execute a test run to check there is no generation of smoke or abnormal sound. If check is not executed, a fire or an electric shock is caused. Before test run, install the front panel and cabinet.
	Be sure to fix the screws back which have been removed for installation or other purposes.
Do not operate the unit with the valve closed.	Check the following matters before a test run after repairing piping. • Connect the pipes surely and there is no leak of refrigerant. • The valve is opened. Running the compressor under condition that the valve closes causes an abnormal high pressure resulted in damage of the parts of the compressor and etc. and moreover if there is leak of refrigerant at connecting section of pipes, the air is sucked and causes further abnormal high pressure resulted in burst or injury.
Check after reinstallation	Only a qualified installer (*1) or qualified service person (*1) is allowed to relocate the air conditioner. It is dangerous for the air conditioner to be relocated by an unqualified individual since a fire, electric shocks, injury, water leakage, noise and/or vibration may result.
	Check the following items after reinstallation. 1) The earth wire is correctly connected. 2) The power cord is not caught in the product. 3) There is no inclination or unsteadiness and the installation is stable. If check is not executed, a fire, an electric shock or an injury is caused.
	When carrying out the pump-down work shut down the compressor before disconnecting the refrigerant pipe. Disconnecting the refrigerant pipe with the service valve left open and the compressor still operating will cause air, etc. to be sucked in, raising the pressure inside the refrigeration cycle to an abnormally high level, and possibly resulting in reputing, injury, etc.
Cooling check	When the service panel of the outdoor unit is to be opened in order for the compressor or the area around this part to be repaired immediately after the air conditioner has been shut down, set the circuit breaker to the OFF position, and then wait at least 10 minutes before opening the service panel. If you fail to heed this warning, you will run the risk of burning yourself because the compressor pipes and other parts will be very hot to the touch. In addition, before proceeding with the repair work, wear the kind of insulated heat-resistant gloves designed to protect electricians.
	Take care not to get burned by compressor pipes or other parts when checking the cooling cycle while running the unit as they get heated while running. Be sure to put on gloves providing protection for electric shock and heat.
	When the service panel of the outdoor unit is to be opened in order for the fan motor, reactor, inverter or the areas around these parts to be repaired immediately after the air conditioner has been shut down, set the circuit breaker to the OFF position, and then wait at least 10 minutes before opening the service panel. If you fail to heed this warning, you will run the risk of burning yourself because the fan motor, reactor, inverter heat sink and other parts will be very hot to the touch. In addition, before proceeding with the repair work, wear the kind of insulated heat-resistant gloves designed to protect electricians.

Installation	Only a qualified installer (*1) or qualified service person (*1) is allowed to install the air conditioner. If the air conditioner is installed by an unqualified individual, a fire, electric shocks, injury, water leakage, noise and/or vibration may result.
	Before starting to install the air conditioner, read carefully through the Installation Manual, and follow its instructions to install the air conditioner.
	Be sure to use the company-specified products for the separately purchased parts. Use of non-specified products may result in fire, electric shock, water leakage or other failure. Have the installation performed by a qualified installer.
	Do not supply power from the power terminal block equipped on the outdoor unit to another outdoor unit. Capacity overflow may occur on the terminal block and may result in fire.
	Do not install the air conditioner in a location that may be subject to a risk of expire to a combustible gas. If a combustible gas leaks and becomes concentrated around the unit, a fire may occur.
	Install the indoor unit at least 2.5 m above the floor level since otherwise the users may injure themselves or receive electric shocks if they poke their fingers or other objects into the indoor unit while the air conditioner is running.
	Install a circuit breaker that meets the specifications in the installation manual and the stipulations in the local regulations and laws.
	Install the circuit breaker where it can be easily accessed by the qualified service person (*1).
	If you install the unit in a small room, take appropriate measures to prevent the refrigerant from exceeding the limit concentration even if it leaks. Consult the dealer from whom you purchased the air conditioner when you implement the measures. Accumulation of highly concentrated refrigerant may cause an oxygen deficiency accident.
	Do not place any combustion appliance in a place where it is directly exposed to the wind of air conditioner, otherwise it may cause imperfect combustion.

Explanations given to user

- If you have discovered that the fan grille is damaged, do not approach the outdoor unit but set the circuit breaker to the OFF position, and contact a qualified service person to have the repairs done.
  Do not set the circuit breaker to the ON position until the repairs are completed.

Relocation

- Only a qualified installer (*1) or qualified service person (*1) is allowed to relocate the air conditioner.
  It is dangerous for the air conditioner to be relocated by an unqualified individual since a fire, electric shocks, injury, water leakage, noise and/or vibration may result.
- When carrying out the pump-down work shut down the compressor before disconnecting the refrigerant pipe.
  Disconnecting the refrigerant pipe with the service valve left open and the compressor still operating will cause air, etc. to be sucked in, raising the pressure inside the refrigeration cycle to an abnormally high level, and possibly resulting in reputing, injury, etc.

(*1) Refer to the “Definition of Qualified Installer or Qualified Service Person.”

Carrying in the Outdoor Unit

⚠ CAUTION

Handle the outdoor unit carefully, observing the following items.

- To use a forklift or other machinery for loading / unloading in transportation, insert the prongs of the forklift into the rectangular holes for handling as shown below.
- To lift up the unit, insert a rope capable of bearing the weight of the unit into the rectangular holes shown below. Tie the unit from 4 sides.
  (Apply padding in positions where the rope comes in contact with the outdoor unit so that no damage is caused to the outer surface of the outdoor unit.)
  (There are reinforcing plates on the side surfaces, so the rope cannot be passed through.)

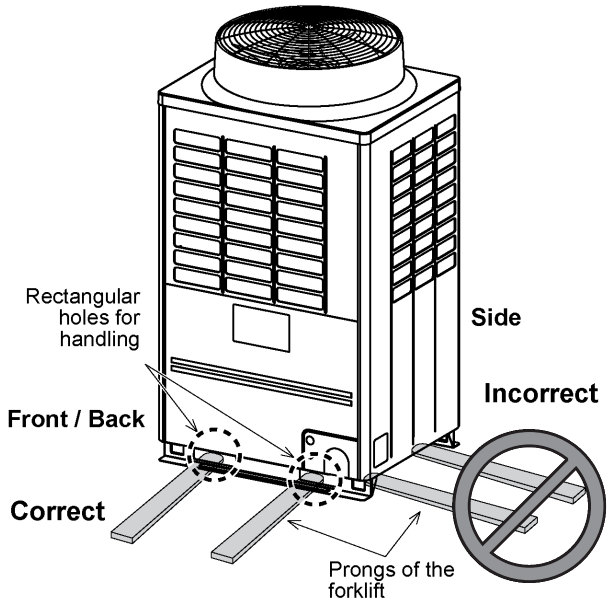

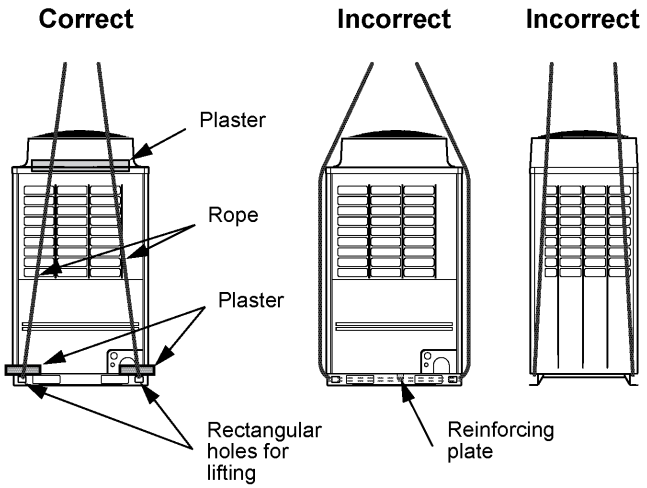

■ Weight centre and weight

◆ Weight centre of an outdoor unit

Unit: in (mm)

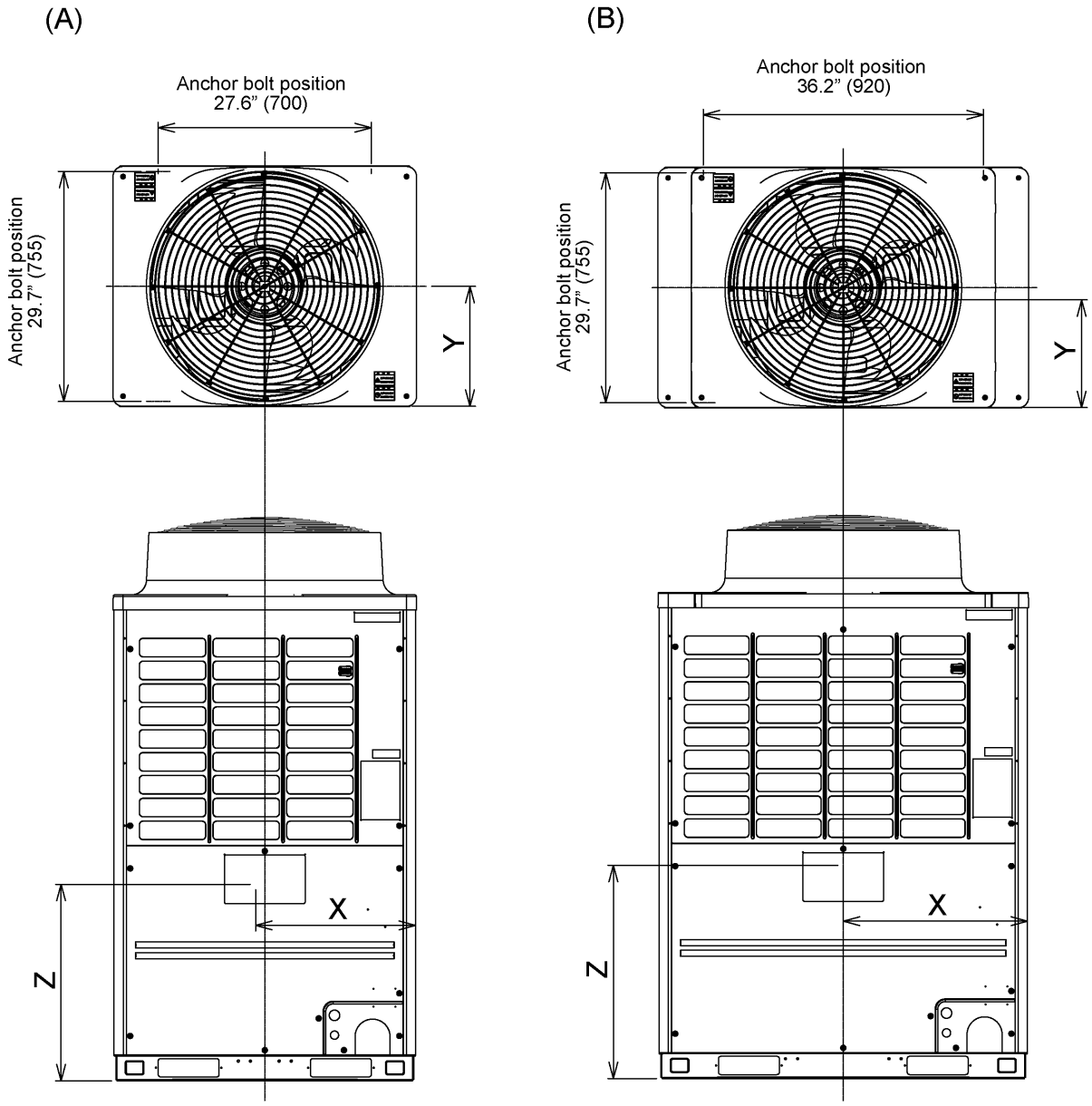

	Model type	X (in (mm))	Y (in (mm))	Z (in (mm))	Weight (lb (kg))
(A)	MAP072	19.7” (500)	15.4” (390)	25.4” (645)	546 (247)
(B)	MAP096	23.8” (605)	13.8” (350)	27.6” (700)	742 (336)
	MAP114				

■ Screw size and tightening torque

	Screw size	Tightening torque (ft•lbs (N•m))
Power supply terminal	M8	4.1 to 4.8 (5.5 to 6.6)
Ground screw	M8	4.1 to 4.8 (5.5 to 6.6)
Control wire terminal	M3.5	0.6 to 0.7 (0.80 to 0.96)

■ Adding refrigerant

After finishing vacuuming, exchange the vacuum pump with a refrigerant canister and start additional charging of refrigerant.

■ Calculation of additional refrigerant charge amount

Additional refrigerant charge amount	(lb)	=	Actual length of liquid pipe	×	Additional refrigerant charge amount per liquid pipe 1ft [Table 3]	+	Adjustment amount of refrigerant [Table 4]

Table 3

Liquid pipe outer dia.	Ø1/4	Ø3/8	Ø1/2	Ø5/8	Ø3/4
Additional refrigerant amount / 1 ft (lb)	0.017	0.037	0.071	0.108	0.168

Table 4

Outdoor unit capacity type	Adjustment amount of refrigerant (lb)	Combined outdoor units	
072 type	3.31	072 type	–
096 type	13.23	096 type	–
114 type	15.43	114 type	–
144 type	0.00	072 type	072 type
168 type	16.53	096 type	072 type
192 type	27.56	096 type	096 type
228 type	27.56	114 type	114 type

Example:
(114 type)

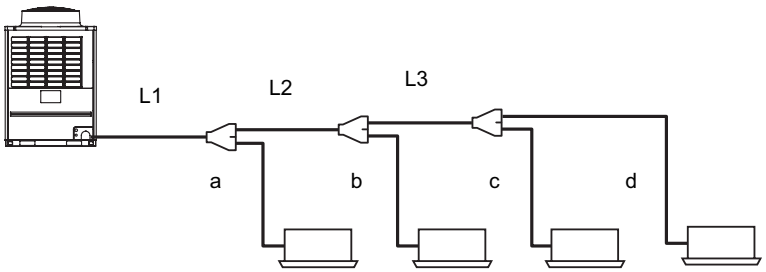

L1	Ø1/2: 30 ft	L2	Ø1/2: 15 ft	L3	Ø3/8: 10 ft		
a	Ø1/4: 10 ft	b	Ø3/8: 15 ft	c	Ø1/4: 10 ft	d	Ø1/4: 10 ft

Additional charge amount (lb) = (Lx × 0.017 lb/ft) + (Ly × 0.037 lb/ft) + (Lz X 0.071 lb/ft) + (15.43 lb)

= ((a+c+d)×0.017 lb)+((L3+b)× 0.037 lb)+((L1+L2)× 0.017 lb+(15.43 lb)

= (30 × 0.017 lb) + (25 × 0.037 lb) + (45 × 0.071 lb) + (15.43 lb)

= 20.06 lb

Lx : Actual total length of liquid pipe Ø1/4 (ft)

Ly : Actual total length of liquid pipe Ø3/8 (ft)

Lz : Actual total length of liquid pipe Ø1/2 (ft)

New Refrigerant (R410A)

This air conditioner adopts a new HFC type refrigerant (R410A) which does not deplete the ozone layer.

1. Safety Caution Concerned to New Refrigerant

The pressure of R410A is high 1.6 times of that of the former refrigerant (R22). Accompanied with change of refrigerant, the refrigerating oil has been also changed. Therefore, be sure that water, dust, the former refrigerant or the former refrigerating oil is not mixed into the refrigerating cycle of the air conditioner with new refrigerant during installation work or service work. If an incorrect work or incorrect service is performed, there is a possibility to cause a serious accident. Use the tools and materials exclusive to R410A to purpose a safe work.

2. Cautions on Installation/Service

(1) Do not mix the other refrigerant or refrigerating oil.
For the tools exclusive to R410A, shapes of all the joints including the service port differ from those of the former refrigerant in order to prevent mixture of them.

(2) As the use pressure of the new refrigerant is high, use material thickness of the pipe and tools which are specified for R410A.

(3) In the installation time, use clean pipe materials and work with great attention so that water and others do not mix in because pipes are affected by impurities such as water, oxide scales, oil, etc. Use the clean pipes.
Be sure to brazing with flowing nitrogen gas. (Never use gas other than nitrogen gas.)

(4) For the earth protection, use a vacuum pump for air purge.

(5) R410A refrigerant is azeotropic mixture type refrigerant. Therefore use liquid type to charge the refrigerant.
(If using gas for charging, composition of the refrigerant changes and then characteristics of the air conditioner change.)

3. Pipe Materials

For the refrigerant pipes, copper pipe and joints are mainly used. It is necessary to select the most appropriate pipes to conform to the standard. Use clean material in which impurities adhere inside of pipe or joint to a minimum.

(1) Copper pipe

<Piping>
The pipe thickness, flare finishing size, flare nut and others differ according to a refrigerant type.
When using a long copper pipe for R410A, it is recommended to select “Copper or copper-base pipe without seam” and one with bonded oil amount 40mg/10m or less. Also do not use crushed, deformed, discolored (especially inside) pipes. (Impurities cause clogging of expansion valves and capillary tubes.)

<Flare nut>
Use the flare nuts which are attached to the air conditioner unit.

(2) Joint
The flare joint and socket joint are used for joints of the copper pipe. The joints are rarely used for installation of the air conditioner. However clear impurities when using them.

4. Tools

(1) Required Tools for R410A

Mixing of different types of oil may cause a trouble such as generation of sludge, clogging of capillary, etc. Accordingly, the tools to be used are classified into the following three types.

1) Tools exclusive for R410A (Those which cannot be used for conventional refrigerant (R22))
2) Tools exclusive for R410A, but can be also used for conventional refrigerant (R22)
3) Tools commonly used for R410A and for conventional refrigerant (R22)

The table below shows the tools exclusive for R410A and their interchangeability.

Tools exclusive for R410A (The following tools for R410A are required.)

Explanation of symbols

△: Newly prepared (It is necessary to use it exclusively with R410A, separately from those for R22 or R407C.)
◎: Former tool is available.

Used tools	Usage	Proper use of tools/parts
Gauge manifold	Vacuuming, charging refrigerant and operation check	△ Exclusive to R410A
Charging hose		△ Exclusive to R410A
Charging cylinder	Charging refrigerant	Unusable (Use the Refrigerant charging balance.)
Gas leak detector	Checking gas leak	△ Exclusive to R410A
Vacuum pump	Vacuum drying	Usable if a counter-flow preventive adapter is attached
Vacuum pump with counterflow	Vacuum drying	◎ R22 (Existing article)
Flare tool	Flare processing of pipes	◎ Usable by adjusting size
Bender	Bending processing of pipes	◎ R22 (Existing article)
Refrigerant recovery device	Recovering refrigerant	△ Exclusive to R410A
Torque wrench	Tightening flare nut	△ Exclusive to Ø1/4” (6.4 mm) to Ø5/8” (15.9 mm)
Pipe cutter	Cutting pipes	◎ R22 (Existing article)
Refrigerant canister	Charging refrigerant	△ Exclusive to R410A Enter the refrigerate name for identification
Welding machine/Nitrogen gas cylinder	Welding of pipes	◎ R22 (Existing article)
Refrigerant charging balance	Charging refrigerant	◎ R22 (Existing article)

(Note 1) When flaring is carried out for R410A using the conventional flare tools, adjustment of projection margin is necessary. For this adjustment, a copper pipe gauge, etc. are necessary.

(Note 2) Charging cylinder for R410A is being currently developed.

General tools (Conventional tools can be used.)

In addition to the above exclusive tools, the following equipments which serve also for R22 are necessary as the general tools.

(1) Vacuum pump
Use vacuum pump by attaching vacuum pump adapter.
(2) Torque wrench
(3) Pipe cutter
(4) Reamer
(5) Pipe bender
(6) Level vial
(7) Screwdriver (+, –)
(8) Spanner or Monkey wrench
(9) Hole core drill
(10) Hexagon wrench (Opposite side 4mm)
(11) Tape measure
(12) Metal saw

Also prepare the following equipments for other installation method and run check.

(1) Clamp meter
(2) Thermometer
(3) Insulation resistance tester
(4) Electroscope

1 Specifications

(System with Non ducted indoor units)

208/230 V / 3 Ph / 60 Hz
(Heat pump model)

TOSHIBA Carrier VRF Air conditioner

Outdoor unit model name				**MMY-**	**MAP0724HT9UL**	**MAP0964HT9UL**	**MAP1144HT9UL**
Cooling Capacity			(*1)	kBtu/h	72	96	114
Heating Capacity			(*1)	kBtu/h	81	108	128
Power supply				(*2)	230 V (208/230 V) 3 phase 60 Hz		
Starting Current				A	Soft Start		
Dimension	Unit	Height		In	72.9	72.9	72.9
		Width		In	39.0	47.6	47.6
		Depth		In	30.7	30.7	30.7
	Packing	Height		In	76.3	76.3	76.3
		Width		In	41.8	50.5	50.5
		Depth		In	32.6	32.6	32.6
Total Weight	Unit			lb	546	742	742
	Packed unit			lb	579	779	779
Appearance (Color)					Silky shade (Munsell 1Y8.5/0.5)		
Compressor	Type				Hermetic twin rotary compressor		
	Motor output			kW	2.3 x 2	2.1 x 3	2.5 x 3
Fan unit	Fan				Propeller fan		
	Motor output			W	1,000	1,000	1,000
	Air volume			cfm	5,800	6,600	7,060
Heat exchanger					Finned tube		
Refrigerant R410A (Charged refrigerant amount(lb))				(*3)	25.4	25.4	25.4
High-pressure switch				psi	OFF: 420 ON: 540		
Protective devices					High-pressure switch / High-pressure sensor / Low-pressure sensor / Fusible plug / PC board fuse / Inverter overload protector		
Electrical specifications	Unit	MCA	(*4)	A	36	50	52
		MOCP	(*5)	A	40	60	60
Refrigerant piping	Connecting port dia	Gas side (main pipe)		In	7/8”	7/8”	1-1/8”
		Liquid side (main pipe)		In	1/2”	1/2”	1/2”
		Balance pipe		In	3/8”	3/8”	3/8”
System interconnection wiring			(Up to 3280 ft)		Shielded wire AWG16 x 2 cores		
			(Up to 6560 ft)		Shielded wire AWG14 x 2 cores		
Operation temperature range		Cooling		FDB	23 to 109		
		Heating		FWB	5 to 60		
Max external static pressure				In WG	0.20	0.20	0.20
Max. No. of connected indoor units					12	16	19
Sound pressure level		Cooling/Heating		dB(A)	56/57	60/62	62/63

(*1) Rated conditions Cooling : Indoor 80 degF Dry Bulb / 67 degF Wet Bulb, Outdoor 95 degF Dry Bulb.
Heating : Indoor 70 degF Dry Bulb, Outdoor 47 degF Dry Bulb / 43 degF WetBulb.

The standard pipe

P072type, P096type	Equivalent piping length : 50 ft, Hight difference : 0 ft
P114type	Equivalent piping length : 75 ft, Hight difference : 0 ft

(*2) The source voltage must not fluctuate more than ±10 %
(*3) The amount dose not consider extra piping length. Refrigerant must be added on site in accordance with the actual piping length.
(*4) Select wire size base on the larger value of MCA.
MCA : Minimum Circuit Amps (minimum circuit Amps required for power supply design.)
(*5) MOCP : Maximum Overcurrent Protection (Amps)

208/230 V / 3 Ph / 60 Hz
(Heat pump model)

TOSHIBA Carrier VRF Air conditioner

Outdoor unit set model name				**MMY-**	**AP1444HT9UL**		**AP1684HT9UL**		**AP1924HT9UL**		**AP2284HT9UL**	
Outdoor unit model name				MMY-MAP	0724HT9UL	0724HT9UL	0964HT9UL	0724HT9UL	0964HT9UL	0964HT9UL	1144HT9UL	1144HT9UL
Cooling Capacity			(*1)	kBtu/h	144		168		192		220	
Heating Capacity			(*1)	kBtu/h	162		189		212		247	
Power supply				(*2)	230 V (208/230 V) 3 phase 60 Hz							
Starting Current				A	Soft Start							
Dimension	Unit	Height		In	72.9	72.9	72.9	72.9	72.9	72.9	72.9	72.9
		Width		In	39.0	39.0	47.6	39.0	47.6	47.6	47.6	47.6
		Depth		In	30.7	30.7	30.7	30.7	30.7	30.7	30.7	30.7
	Packing	Height		In	76.3	76.3	76.3	76.3	76.3	76.3	76.3	76.3
		Width		In	41.8	41.8	50.5	41.8	50.5	50.5	50.5	50.5
		Depth		In	32.6	32.6	32.6	32.6	32.6	32.6	32.6	32.6
Total Weight	Unit			lb	546	546	742	742	742	742	742	742
	Packed unit			lb	579	579	779	779	779	779	779	779
Appearance (Color)					Silky shade (Munsell 1Y8.5/0.5)							
Compressor	Type				Hermetic twin rotary compressor							
	Motor output			kW	2.3 x 2	2.3 x 2	2.1 x 3	2.3 x 2	2.1 x 3	2.1 x 3	2.5 x 3	2.5 x 3
Fan unit	Fan				Propeller fan							
	Motor output			W	1,000	1,000	1,000	1,000	1,000	1,000	1,000	1,000
	Air volume			cfm	5,800	5,800	6,600	5,800	6,600	6,600	7,060	7,060
Heat exchanger					Finned tube							
Refrigerant R410A(Charged refrigerant amount(lb))				(*3)	25.4	25.4	25.4	25.4	25.4	25.4	25.4	25.4
High-pressure switch				psi	OFF: 420 ON: 540							
Protective devices					High-pressure switch / High-pressure sensor / Low-pressure sensor / Fusible plug / PC board fuse / Inverter overload protector							
Electrical specifications	Unit	MCA	(*4)	A	36	36	50	36	50	50	52	52
		MOCP	(*5)	A	40	40	60	40	60	60	60	60
Refrigerant piping	Connecting port dia	Gas side (main pipe)		In	1-1/8"		1-1/8"		1-1/8"		1-3/8"	
		Liquid side (main pipe)		In	5/8"		5/8"		5/8"		3/4"	
		Balance pipe		In	3/8”		3/8”		3/8”		3/8”	
System interconnection wiring			(Up to 3280 ft)		Shielded wire AWG16 x 2 cores							
			(Up to 6560 ft)		Shielded wire AWG14 x 2 cores							
Operation temperature range	Cooling			FDB	23 to 109							
	Heating			FWB	5 to 60							
Max external static pressure				In WG	0.20	0.20	0.20	0.20	0.20	0.20	0.20	0.20
Max. No. of connected indoor units					24		28		32		38	
Sound pressure level	Cooling/Heating			dB(A)	59/60		61.5/63.5		63/65		65/66	

(*1) Rated conditions
Cooling : Indoor 80 degF Dry Bulb / 67 degF Wet Bulb, Outdoor 95 degF Dry Bulb.
Heating : Indoor 70 degF Dry Bulb, Outdoor 47 degF Dry Bulb / 43 degC WetBulb.

The standard pipe

P144type - P228type	Equivalent piping length : 100 ft, Hight difference : 0 ft

(*2) The source voltage must not fluctuate more than ±10 %
(*3) The amount dose not consider extra piping length. Refrigerant must be added on site in accordance with the actual piping length.
(*4) Select wire size base on the larger value of MCA.
MCA : Minimum Circuit Amps (minimum circuit Amps required for power supply design.)
(*5) MOCP : Maximum Overcurrent Protection (Amps)

2 Wiring Diagrams

2-1. Outdoor unit

Models: MMY-MAP0724HT9UL

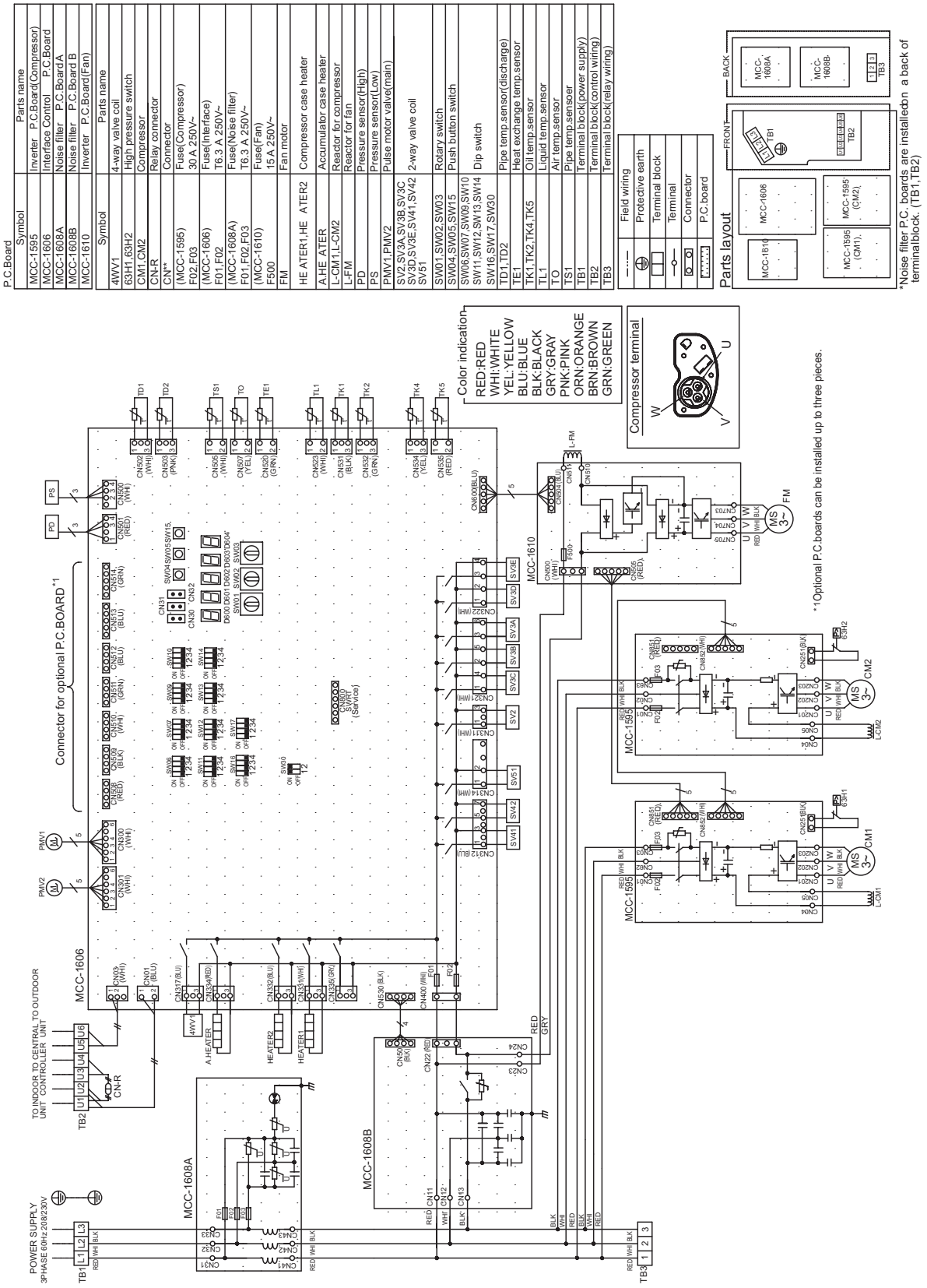

Models: MMY-MAP0964HT9UL and MAP1144HT9UL

P.C.Board

Symbol	Parts name
MCC-1595	Inverter P.C.Board (Compressor)
MCC-1606	Interface Control P.C.Board
MCC-1608 A	Noise filter P.C.Board A
MCC-1608B	Noise filter P.C.Board B
MCC-1610	Inverter P.C.Board(Fan)

Symbol	Parts name
4WV1	4-way valve coil
63H1,63H2,63H3	High pressure switch
CM1,CM2,CM3	Compressor
CN-R	Relay connector
CN**	Connector
(MCC-1595) F02,F03	Fuse(Compressor) 30 A 250V~
(MCC-1606) F01,F02	Fuse(Interface) T6.3 A 250V ~
(MCC-1608A) F01,F02,F03	Fuse(Noise filter) T6.3 A 250V ~
(MCC-1610) F500	Fuse(Fan) 15 A 250V ~
FM	Fan motor
HE ATER1,HE ATER2 HE ATER3	Compressor case heater
A-HE ATER	Accumulator case heater
L-CM1,L-CM2,L-CM3	Reactor for compressor
L-FM	Reactor for fan
PD	Pressure sensor(High)
PS	Pressure sensor(Low)
PMV1,PMV2	Pulse motor valve(main)
PMV4	Pulse motor valve(sub)
SV2,SV3A,SV3B,SV3C SV3D,SV3E,SV3F,SV41 SV42,SV43,SV61	2-way valve coil
SW01,SW02,SW03	Rotary switch
SW04,SW05,SW15	Push button switch
SW06,SW07,SW09,SW10 SW11,SW12,SW13,SW14 SW16,SW17,SW30	Dip switch
TD1,TD2,TD3	Pipe temp.sensor(discharge)
TE1,TE2	Heat exchange temp.sensor
TK1,TK2,TK3,TK4,TK5	Oil temp.sensor
TL1	Liquid temp.sensor
TO	Air temp.sensor
TS1	Pipe temp.sensor(Suction)
TB1	Terminal block(power supply)
TB2	Terminal block(control wiring)
TB3	Terminal block(relay wiring)
TB4	Terminal block(relay wiring)
TB5	Terminal block(relay wiring)

	Field wiring
	Protective earth
	Terminal block
	Terminal
	Connector
	P.C.board

Parts layout

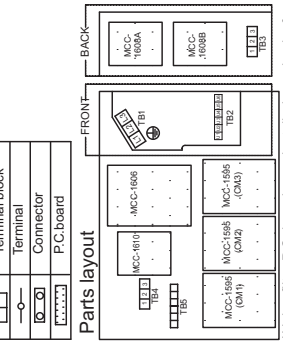

*Noise filter P.C. boards are installed on a back of terminal block. (TB1,TB2)

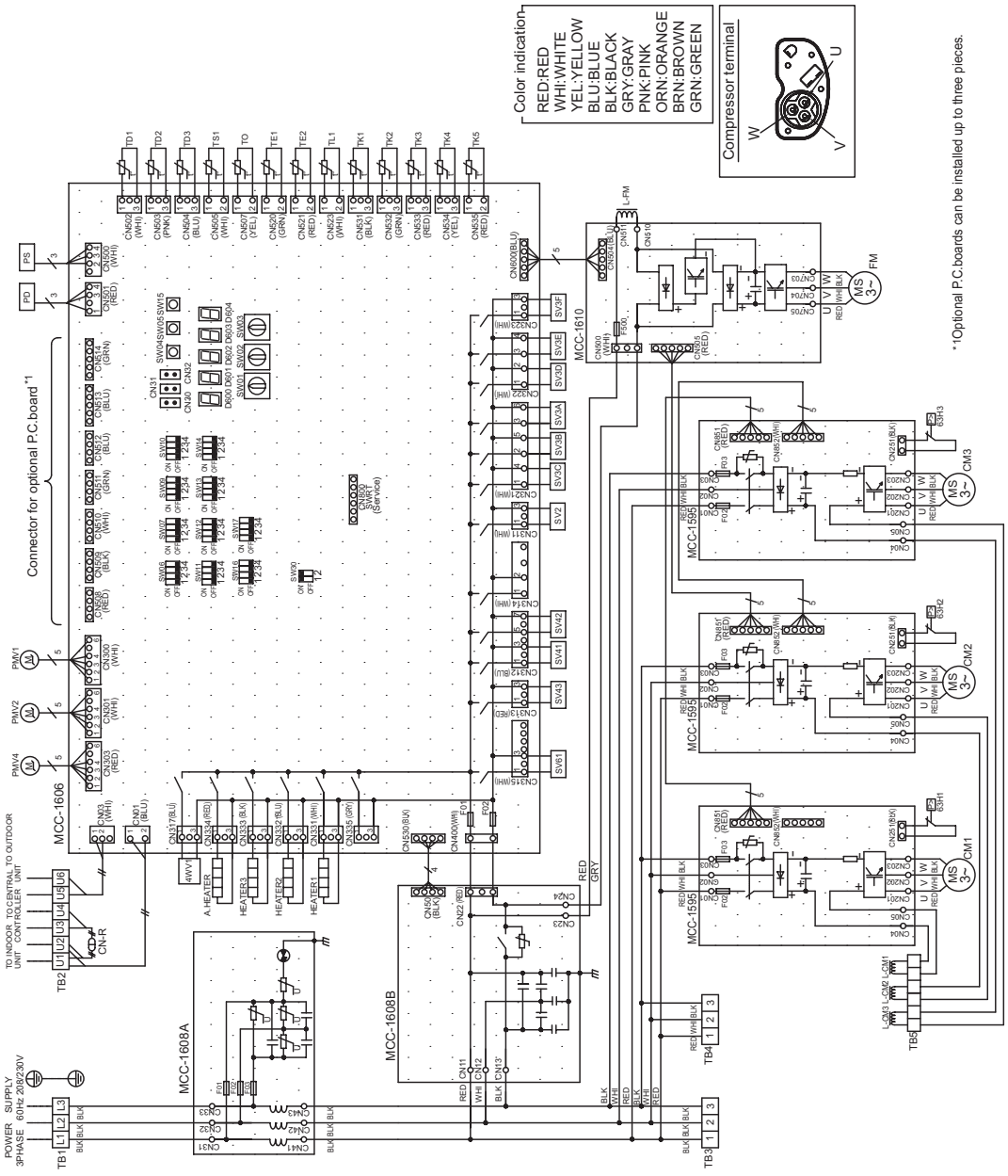

3 Parts Rating

3-1. Outdoor unit

	Name	Model	Specification	MMY-MAP0724*	MMY-MAP0964*	MMY-MAP1144*
1	Compressor	DA421A3FB-28M	Output: 2.3 kW×2	O		
1	Compressor	DA421A3FB-28M	Output: 2.1 kW×3		O	
1	Compressor	DA421A3FB-28M	Output: 2.1 kW×3			O
2	4-way valve coil	STF	AC208-230 V 60 Hz	O	O	O
3	Pulse motor valve coil	HAM-BD28TF-2	DC12 V	O	O	O
4	2-way valve coil	VPV	AC208-230 V 60 Hz SV2,SV3A,SV3B,SV3C,SV3D,SV3E	O		
			AC208-230 V 60 Hz SV2,SV3A,SV3B,SV3C,SV3D,SV3E,SV3F,SV6		O	O
5	2-way valve coil	FQ-D640	AC208-230 V 60 Hz SV41,SV42,SV5	O		
			AC208-230 V 60 Hz SV41,SV42,SV43		O	O
6	High-pressure SW	ACB-4UB	OFF:3.73 MPa ON:2.9 MPa	O	O	O
7	Pressure sensor (For high pressure)	NSK-BC038F-U220	0.5~4.3 V / 0~3.73 MPa	O	O	O
8	Pressure sensor (For low pressure)	NSK-BC010F-U220	0.5~3.5 V / 0~0.98 MPa	O	O	O
9	Fan motor	STF-340A1000-1	DC280 V / 1 kW	O	O	O
10	Case heater (For comp.)		AC240 V / 29 W	O	O	O
11	Case heater (For accum.)		AC240 V / 55 W	O	O	O
12	Fusible plug		73 °C	O	O	O

3-2. Outdoor inverter

(60Hz model: MMY-MAP***4HT9UL)

	Name	Model	Specification	MMY-MAP0724HT9UL	MMY-MAP0964HT9UL	MMY-MAP1144HT9UL
1	Power supply terminal block	HP-T3015-31-3P-L3S	AC600 V / 100 A, 3 P	O	O	O
2	Relay terminal block for power supply	JXO-6003	AC600 V / 60 A, 3 P	O	O	O
3	Relay terminal block for power supply	JXO-6003	AC600 V / 60 A, 3 P		O	O
4	Relay terminal block for reactor	JXO-3006	AC600 V / 30 A, 6 P		O	O
5	Communication terminal block	JXO-B2H	AC30 V (or no more than DC42 V) / 1 A, 6 P	O	O	O
6	Reactor (For comp.)	CH-80	1.4 mH / 25 A	O	O	O
7	Reactor (For fan)	CH-55	5.8 mH / 14 A	O	O	O
8	Noise Filter P.C. board (MCC-1608)	MCC-1608	—	O	O	O
9	Line Filter	—	0.9 mH / AC500 V / 65 A	O	O	O
10	Interface P.C. board [Outdoor control P.C. board] (MCC-1606)	MCC-1606	—	O	O	O
11	Inverter P.C. board for Compressor [A3 IPDU] (MCC-1595)	MCC-1595	—	O	O	O
12	Fuse (MCC-1595)	CES15 30AF924	30 A / AC250 V (P.C. board)	O	O	O
13	Comp. Motor drive IPM (MCC-1595)	PS21A79	50 A / DC600 V (P.C. board)	O	O	O
14	Inverter P.C. board for fan [FAN IPDU] (MCC-1610)	MCC-1610	—	O	O	O
15	Fuse (MCC-1610)	CES15 15AF924	15 A / AC250 V (P.C. board)	O	O	O
16	Fan motor drive IPM (MCC-1610)	FSBB20CH60C	20 A / DC600 V (P.C. board)	O	O	O
17	Pipe temp. sensor (TD)	—	-30 °C – 135 °C (Ambient temp. range)	O	O	O
18	Pipe temp. sensor (TS)	—	-20 °C – 80 °C (Ambient temp. range)	O	O	O
19	Heat exchanger temp. sensor (TE)	—	-20 °C – 80 °C (Ambient temp. range)	O	O	O
20	Outside temp. sensor (TO)	—	-20 °C – 80 °C (Ambient temp. range)	O	O	O
21	Oil temp. sensor (TK)	—	-30 °C – 135 °C (Ambient temp. range)	O	O	O
22	Liquid temp. sensor (TL)	—	-20 °C – 80 °C (Ambient temp. range)	O	O	O

3-3. Parts layout in outdoor unit

Model: MMY-MAP0724HT9UL

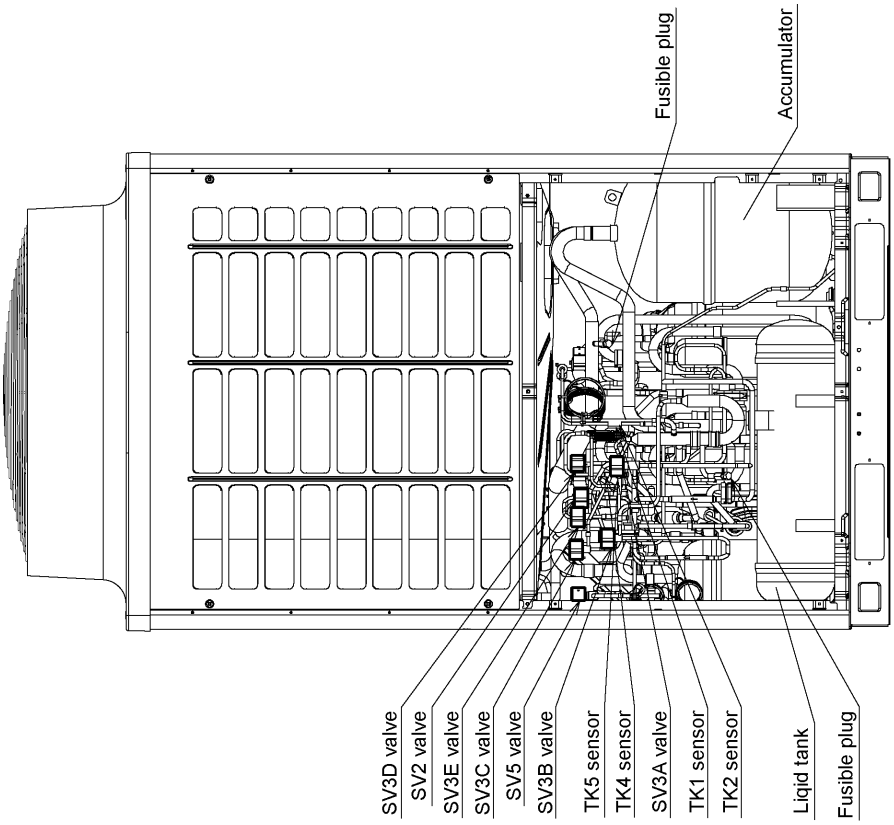

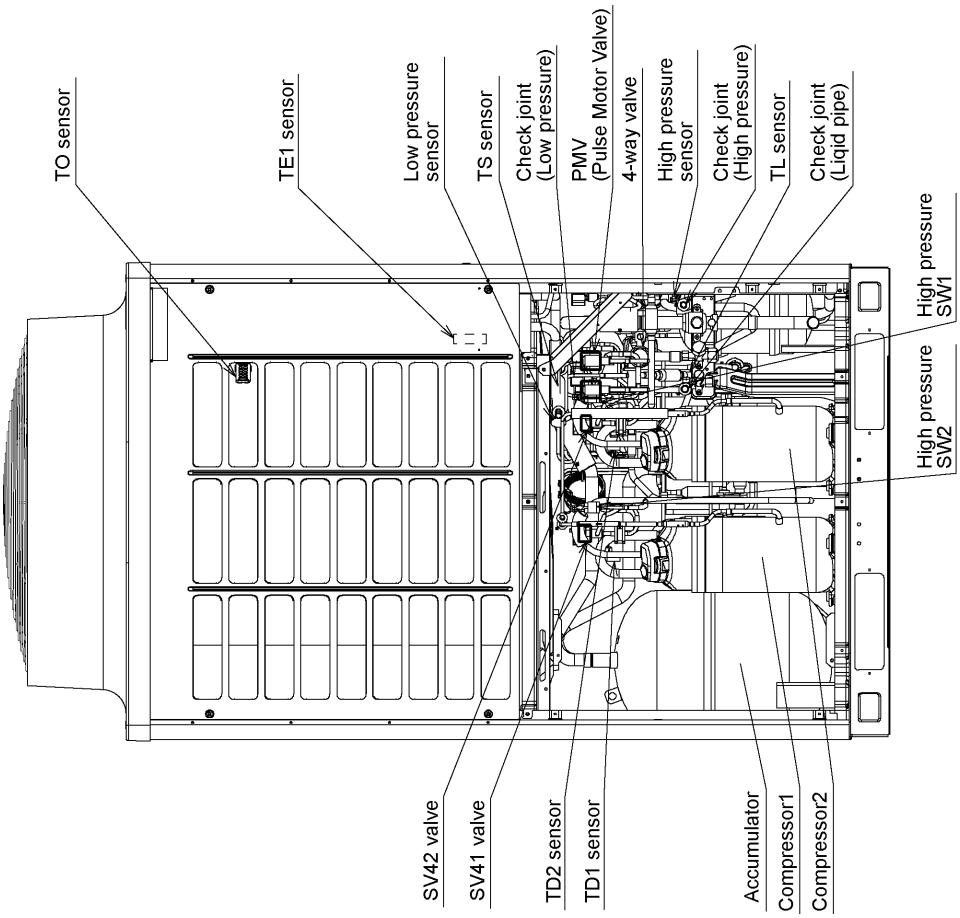

Model: MMY-MAP0964HT9UL, MAP1144HT9UL

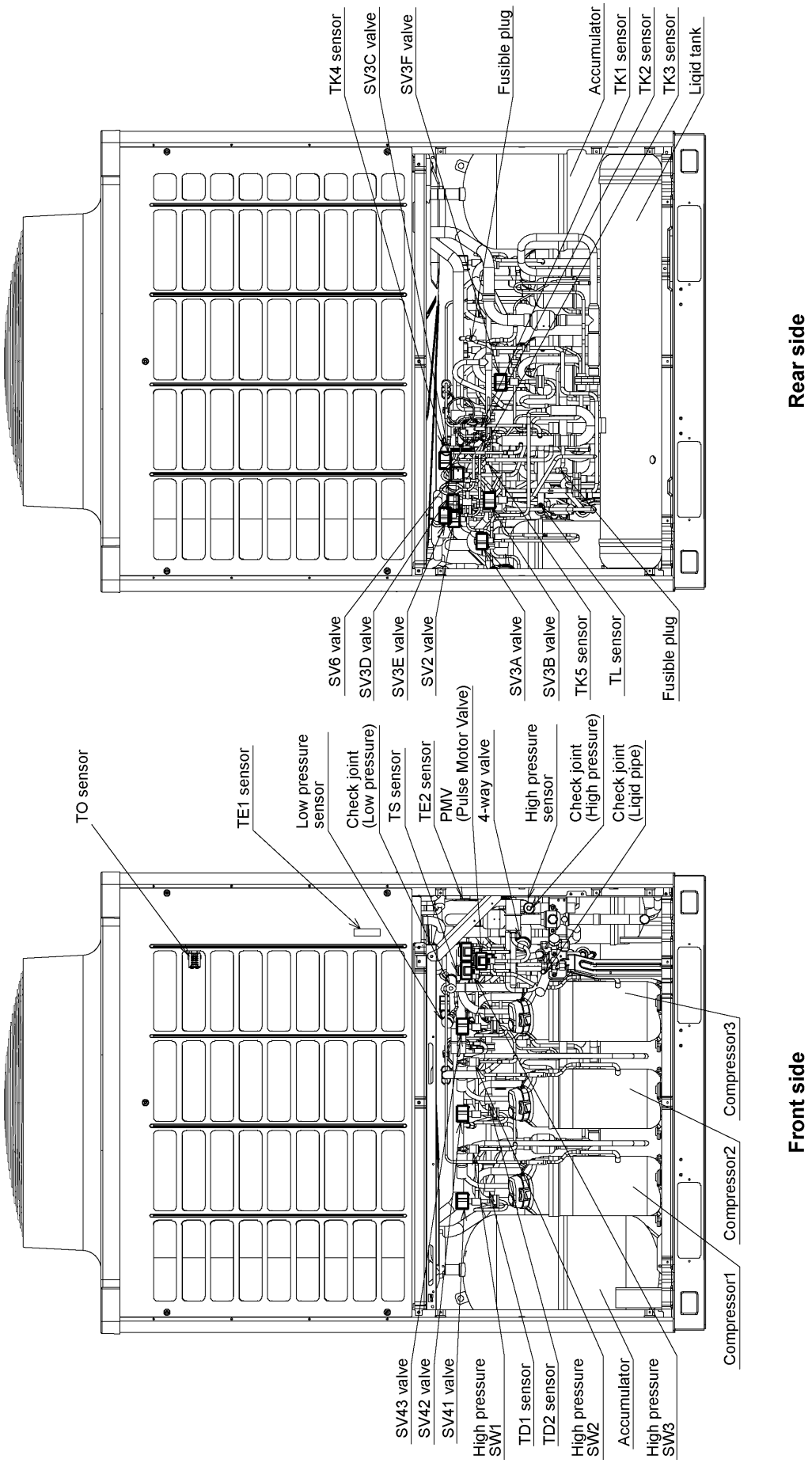

3-4. Parts layout in inverter assembly

Outdoor Unit (6ton)
Model: MMY-MAP0724HT9UL

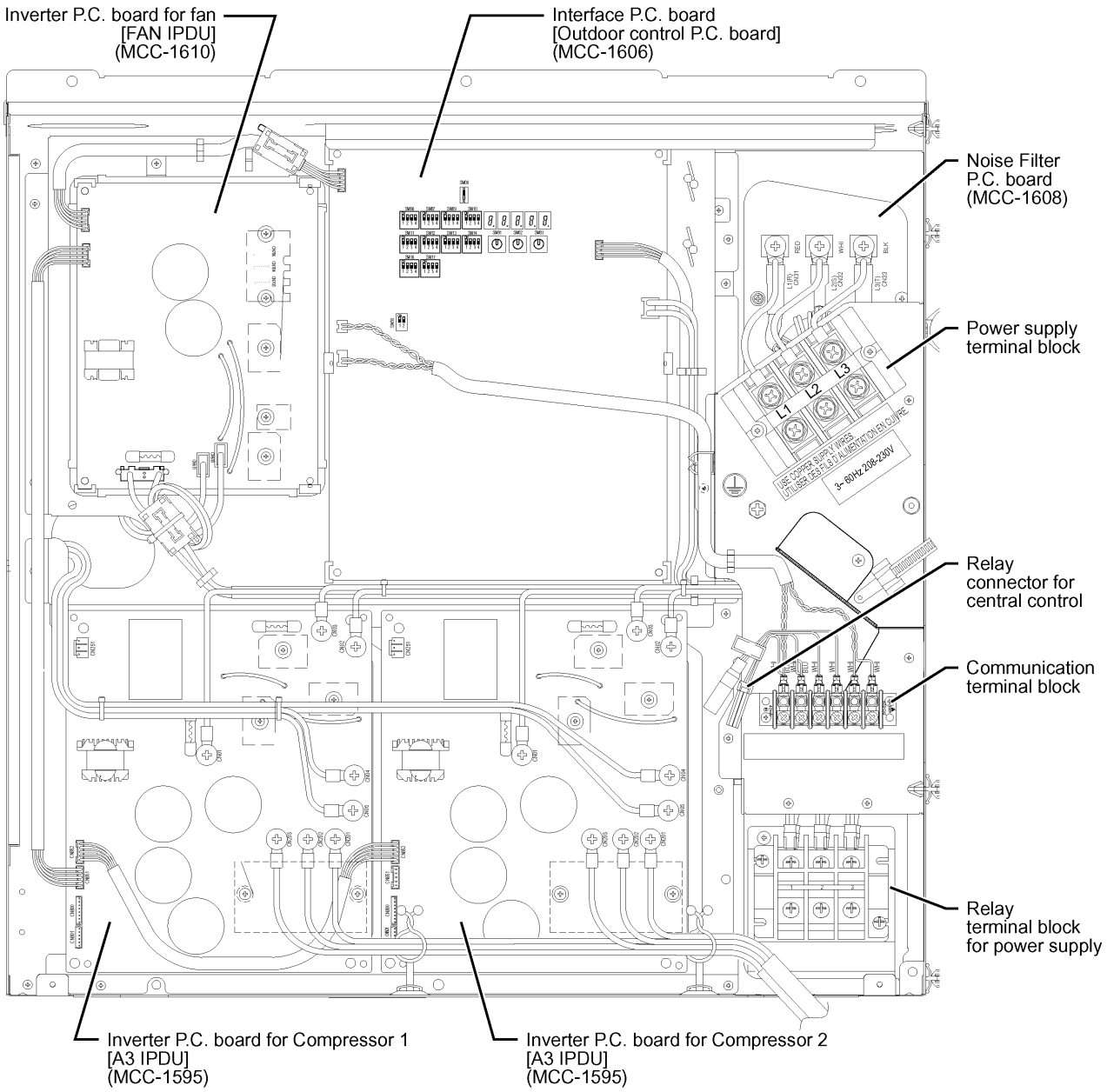

Outdoor Unit (8, 10ton)
Model: MMY-MAP0964HT9UL, MAP1144HT9UL

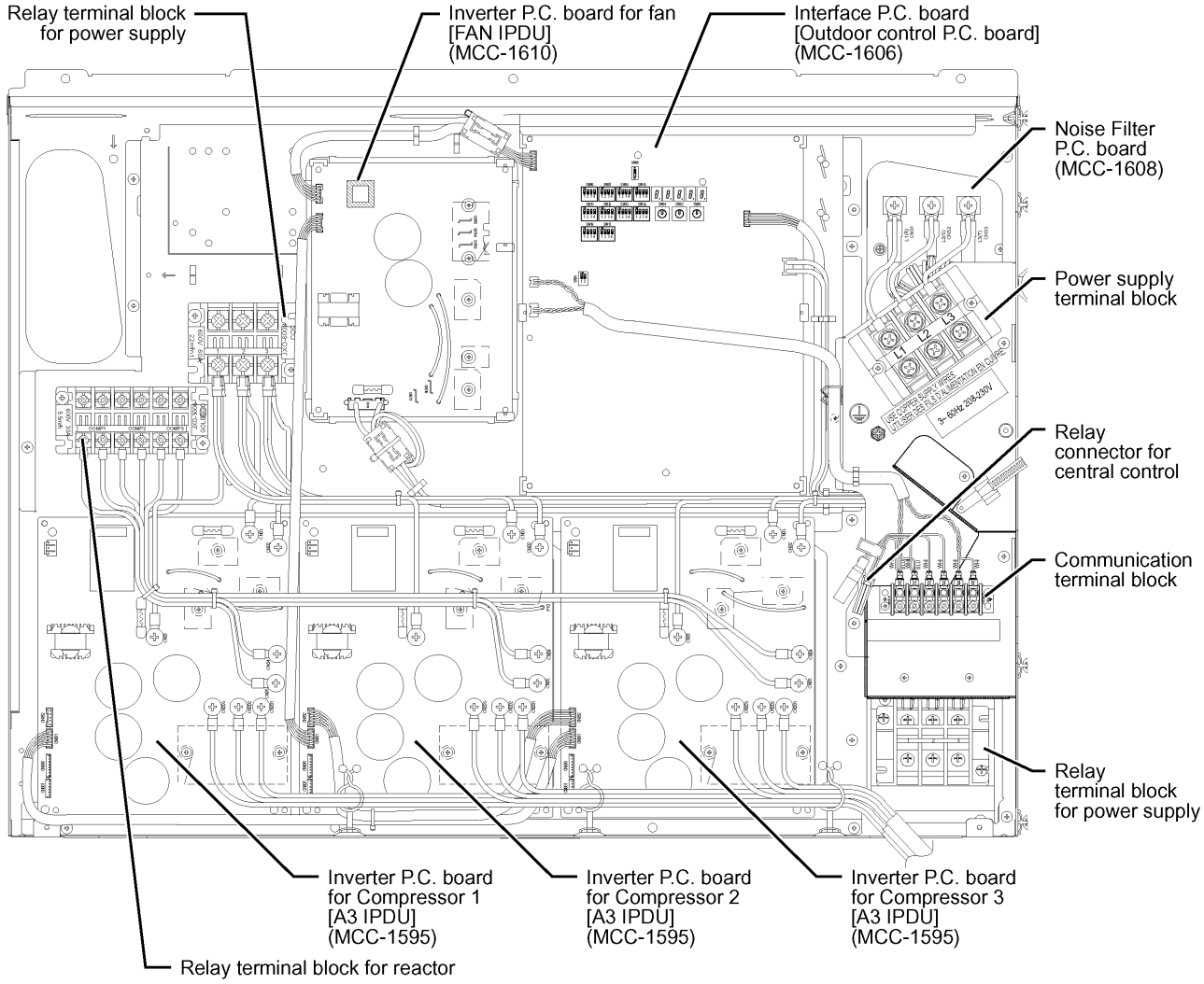

3-5. Outdoor (inverter) print circuit board

3-5-1. Interface P.C. board (MCC-1606)

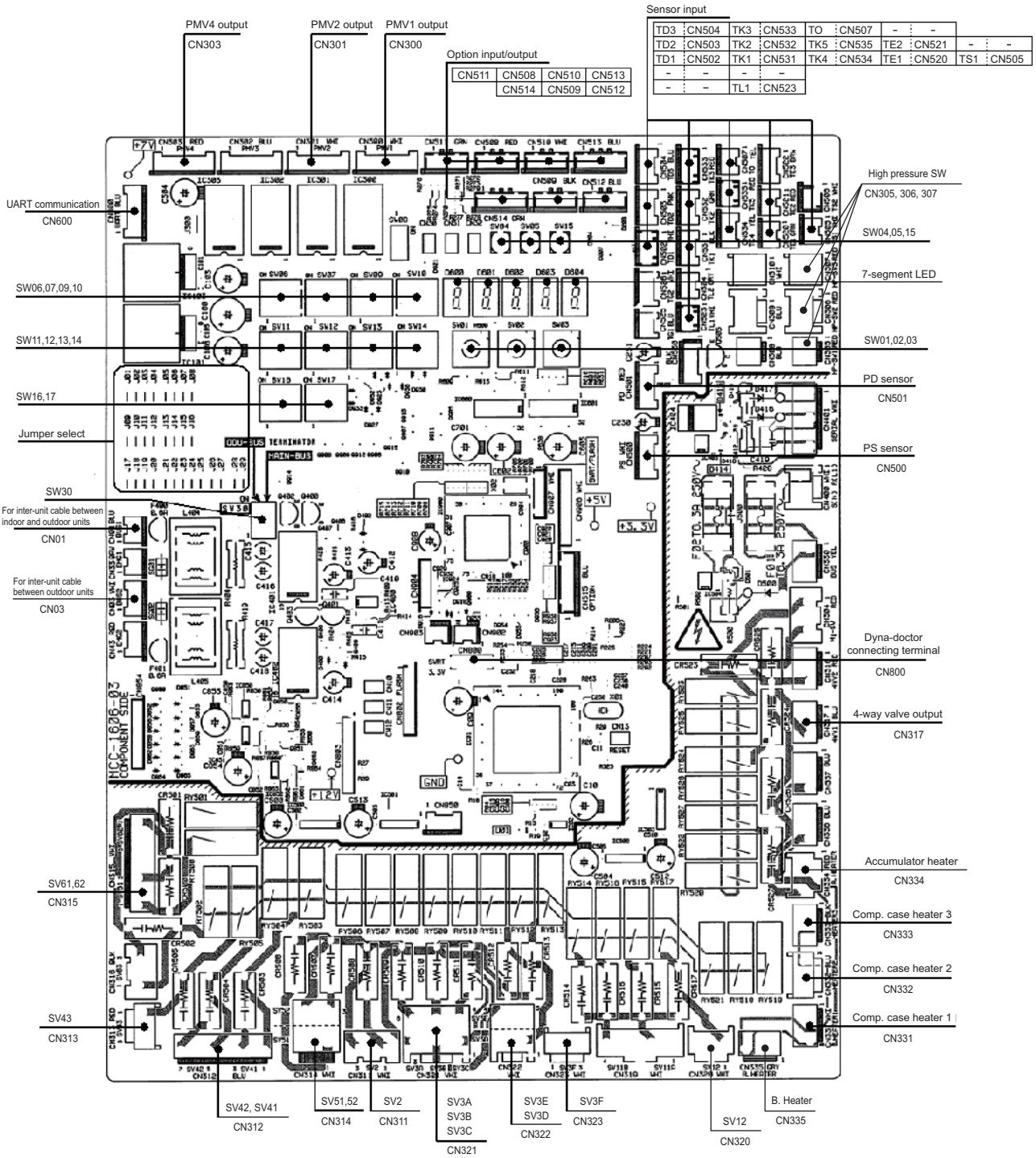

3-5-2. Inverter P.C. board for compressor (MCC-1595) A3-IPDU

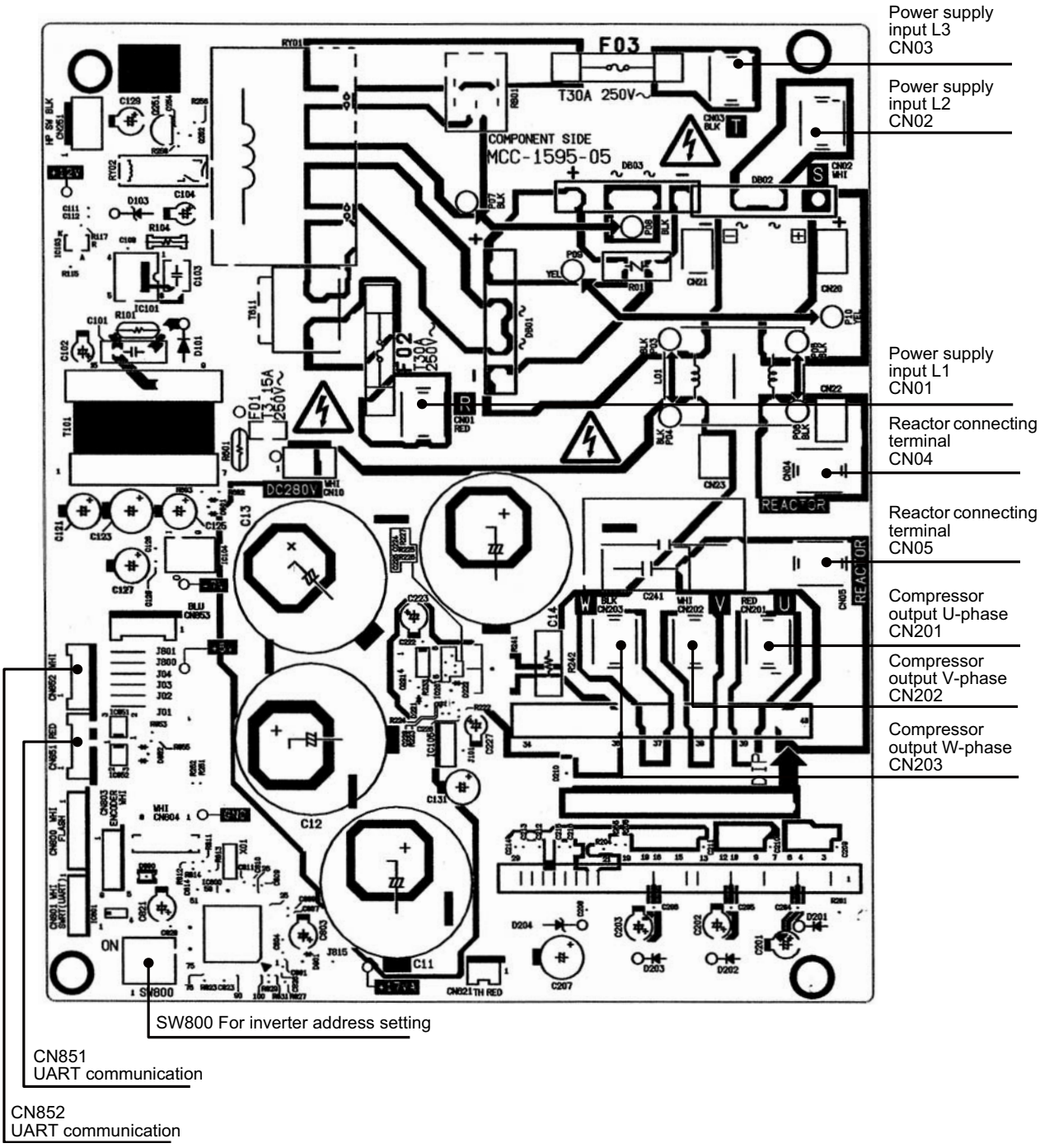

3-5-3. Inverter P.C. board for fan (MCC-1610)

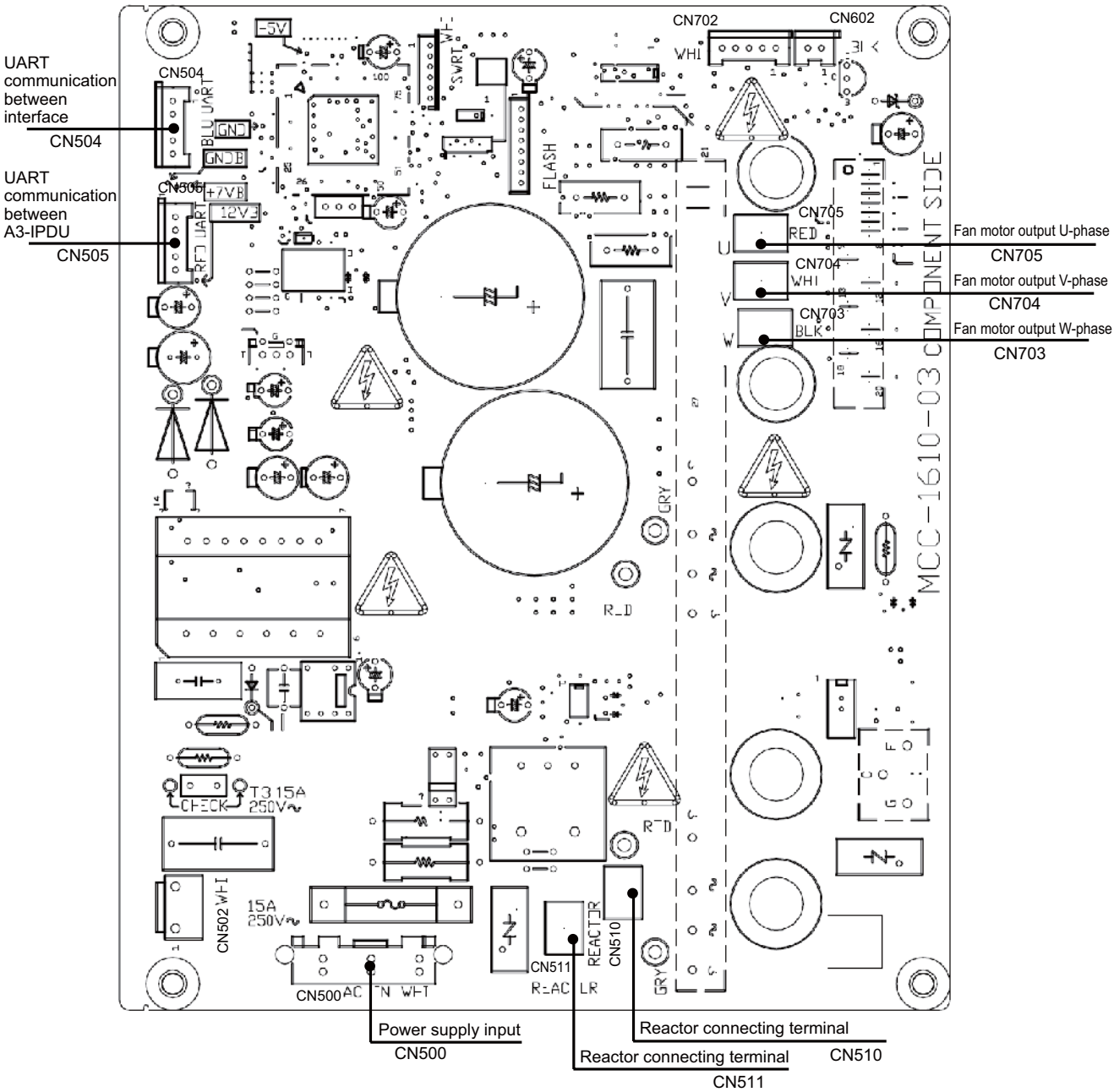

4 Refrigerant Piping Systematic Drawing

Model: MMY-MAP0724HT9UL

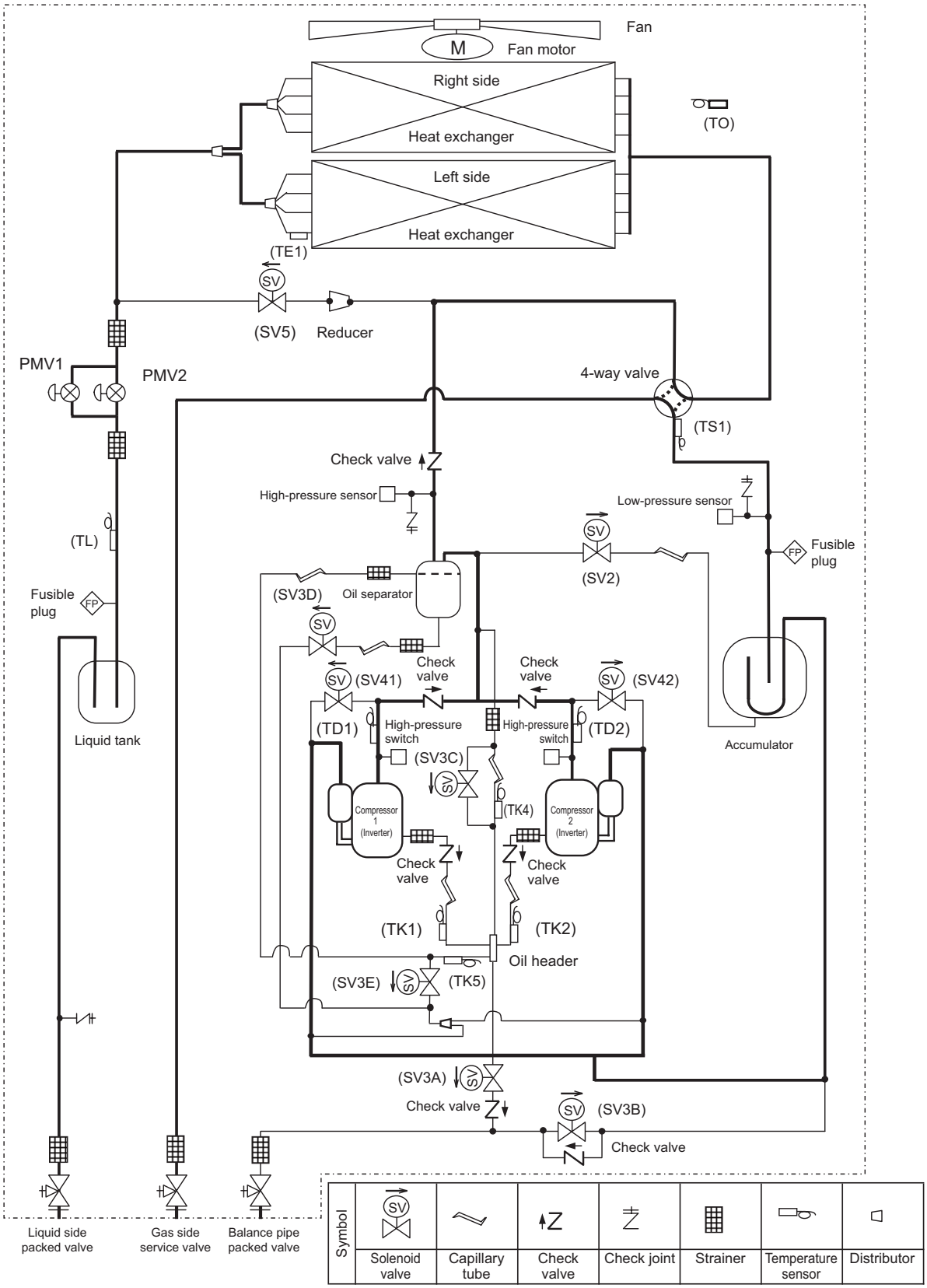

Model: MMY-MAP0964HT9UL, MMY-MAP1144HT9UL

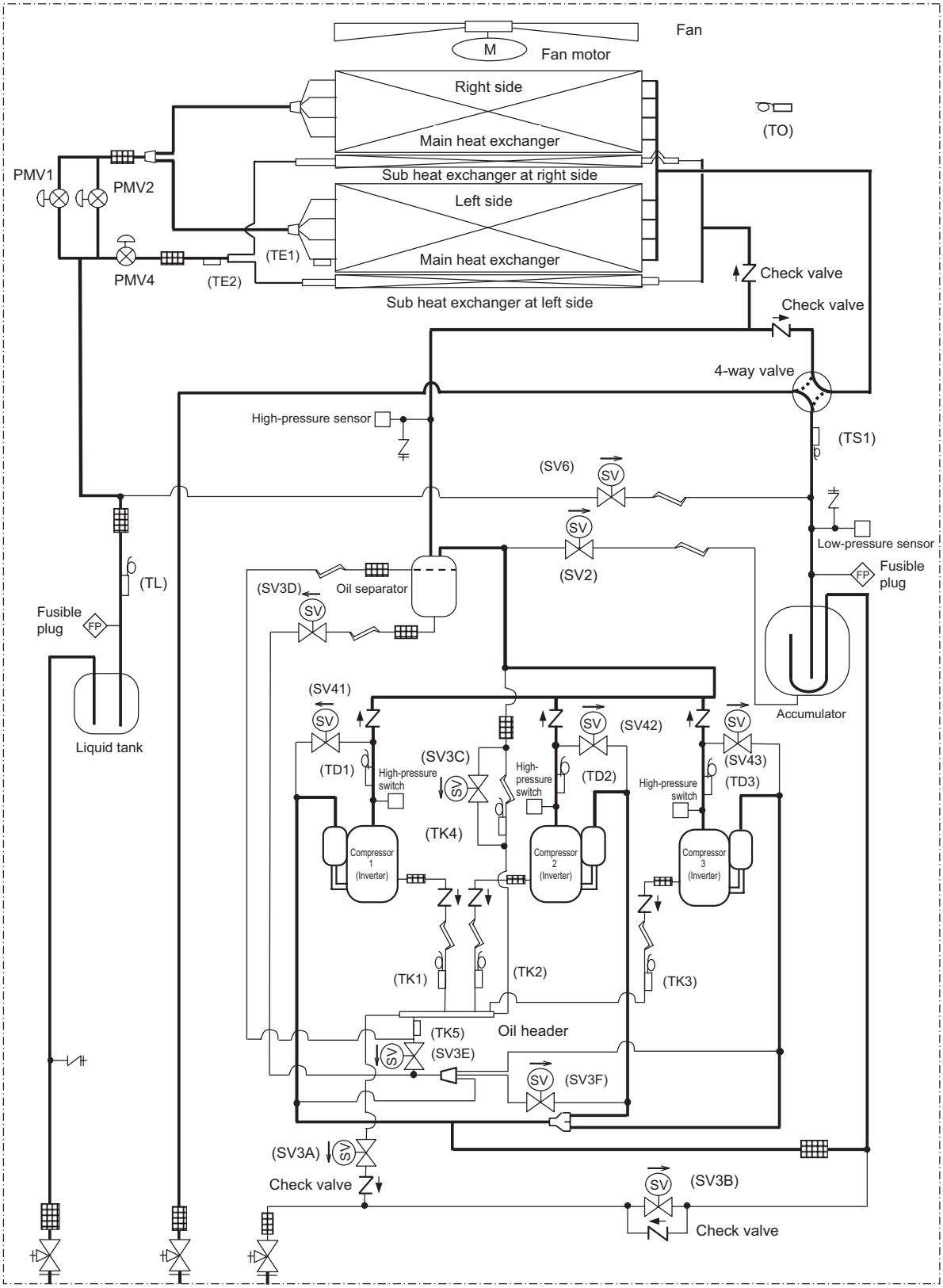

Symbol						
Solenoid valve	Capillary tube	Check valve	Check joint	Strainer	Temperature sensor	Distributor

Explanation of Functional Parts

Functional part name		Functional outline
Solenoid valve	SV3A	(Connector CN321: White) 1) Supplies oil reserved in the oil header during ON time.
	SV3B	(Connector CN321: White) 1) Returns oil supplied in the balance pipe to the compressor.
	SV3C	(Connector CN321: White) 1) Pressurizes oil reserved in the oil header during ON time.
	SV3D	(Connector CN322: White) 1) Reserves oil in the oil separator during OFF time. 2) Returns oil reserved in the oil separator to the compressor during ON time.
	SV3E	(Connector CN322: White) 1) Turns on during operation and balances oil between compressors.
	SV3F	(Connector CN323: White) 1) Controls oil level balances between compressors.
	SV2	(Hot gas bypass) (Connector CN311: White) 1) Low pressure release function 2) High pressure release function 3) Gas balance function during stop time
	SV41 SV42 SV43	(Start compensation valve of compressor) (SV41 Connector CN312: Blue, SV42 Connector CN312: Blue, SV43 Connector CN313: Red) 1) For gas balance start 2) High pressure release function 3) Low pressure release function
	SV5	(Connector CN314: White) 1) Preventive function for high-pressure rising in heating operation
	SV6	(Connector CN315: White) 1) Liquid bypass function for discharge temperature release (cooling bypass function)
4-way valve		(Connector CN317:Blue) 1) Cooling/heating exchange 2) Reverse defrost
Pulse motor valve	PMV1, 2	(Connector CN300, 301: White) 1) Super heat control function in heating operation 2) Liquid line shut-down function while follower unit stops 3) Under cool adjustment function in cooling operation 4) Exchange function between main and sub exchangers in cooling operation
	PMV4	(Connector CN303: Red) 1) Exchange function between main and sub exchangers in cooling operation 2) Preventive function for high-pressure rising in heating operation
Oil separator		1) Prevention for rapid decreasing of oil (Decreases oil flowing to the cycle) 2) Reserve function of surplus oil
Temp. Sensor	TD1 TD2 TD3	(TD1 Connector CN502: White, TD2 Connector CN503: Pink, TD3 Connector CN504: Blue) 1) Protection of compressor discharge temp. 2) Used for discharge temperature release
	TS1	(Connector CN505: White) 1) Controls PMV super heat in heating operation
	TE1	(Connector CN520: Green) 1) Controls defrost in heating operation 2) Controls outdoor fan in heating operation
	TE2	(Connector CN521: Red) 1) Controls exchange function between main and sub exchangers
	TK1, TK2 TK3, TK4 TK5	(TK1 Connector CN531: Black, TK2 Connector CN532: Green, TK3 Connector CN533: Red, TK4 Connector CN534: Yellow, TK5 Connector CN535: Red) 1) Judges oil level of the compressor
	TL	(Connector CN523: White) 1) Detects under cool in cooling operation
	TO	(Connector CN507: Yellow) 1) Detects outside temperature
Pressure sensor	High pressure sensor	(Connector CN501: Red) 1) Detects high pressure and controls compressor capacity 2) Detects high pressure in cooling operation, and controls the fan in low ambient cooling operation 3) Detects under cool in indoor unit in heating operation
	Low pressure sensor	(Connector CN500: White) 1) Detects low pressure in cooling operation and controls compressor capacity 2) Detects low pressure in heating operation, and controls the super heat
Heater	Compressor case heater	(Compressor 1 Connector CN331: White, Compressor 2 Connector CN332: Blue, Compressor 3 Connector CN333: Black) 1) Prevents liquid accumulation to compressor
	Accumulator case heater	(Connector CN334: Red) 1) Prevents liquid accumulation to accumulator
Balance pipe		1) Oil balancing in each outdoor unit

5 Combined Refrigerant Piping System Schematic Diagrams

5-1. Normal operation (COOL mode / DEFROST mode) - high outside air temperature (roughly 68 °F (20 °C) or above)

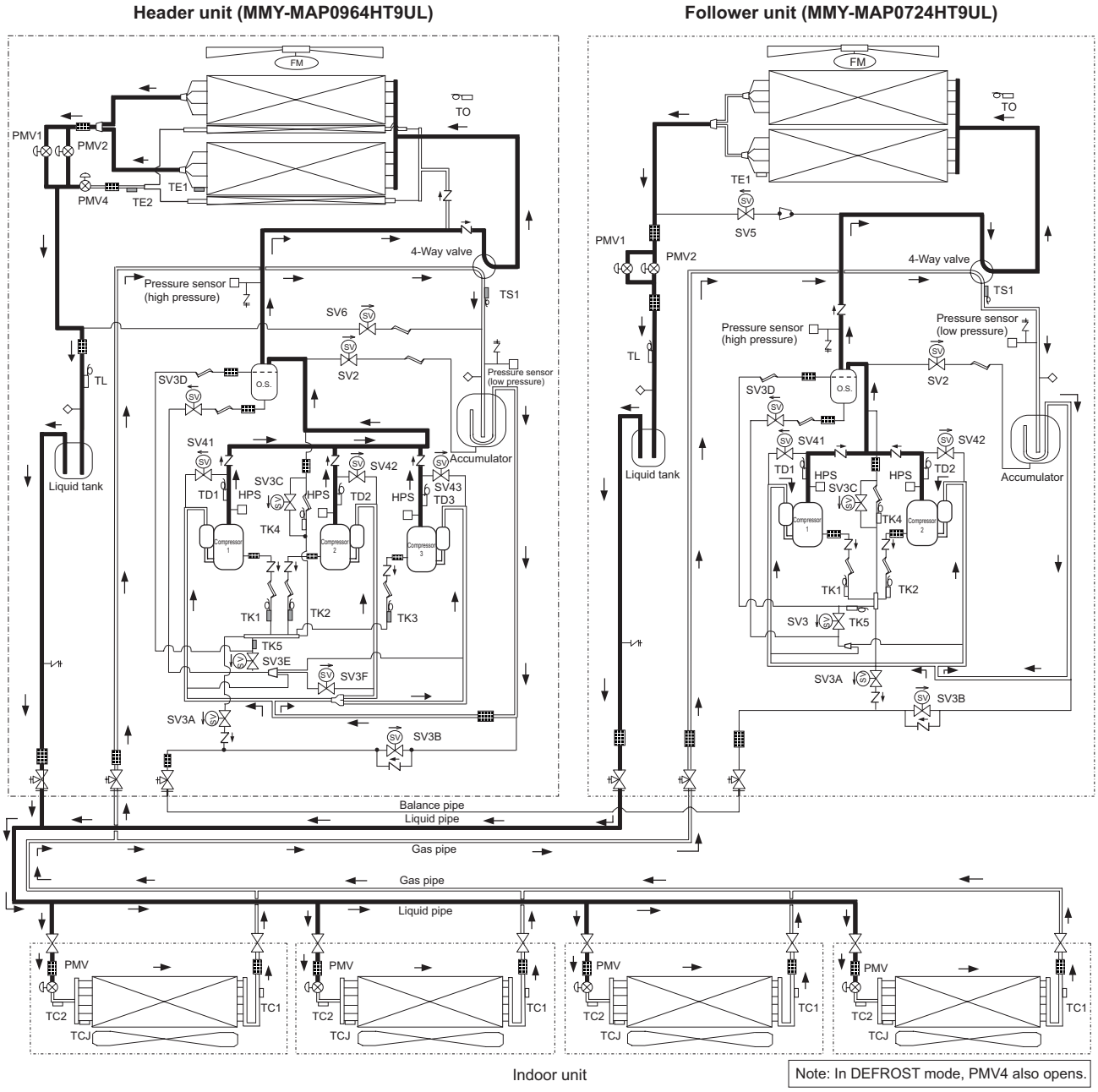

5-2. Normal operation (COOL mode) - low outside air temperature (roughly below 68 °F (20 °C))

Header unit (MMY-MAP0964HT9UL)

Follower unit (MMY-MAP0724HT9UL)

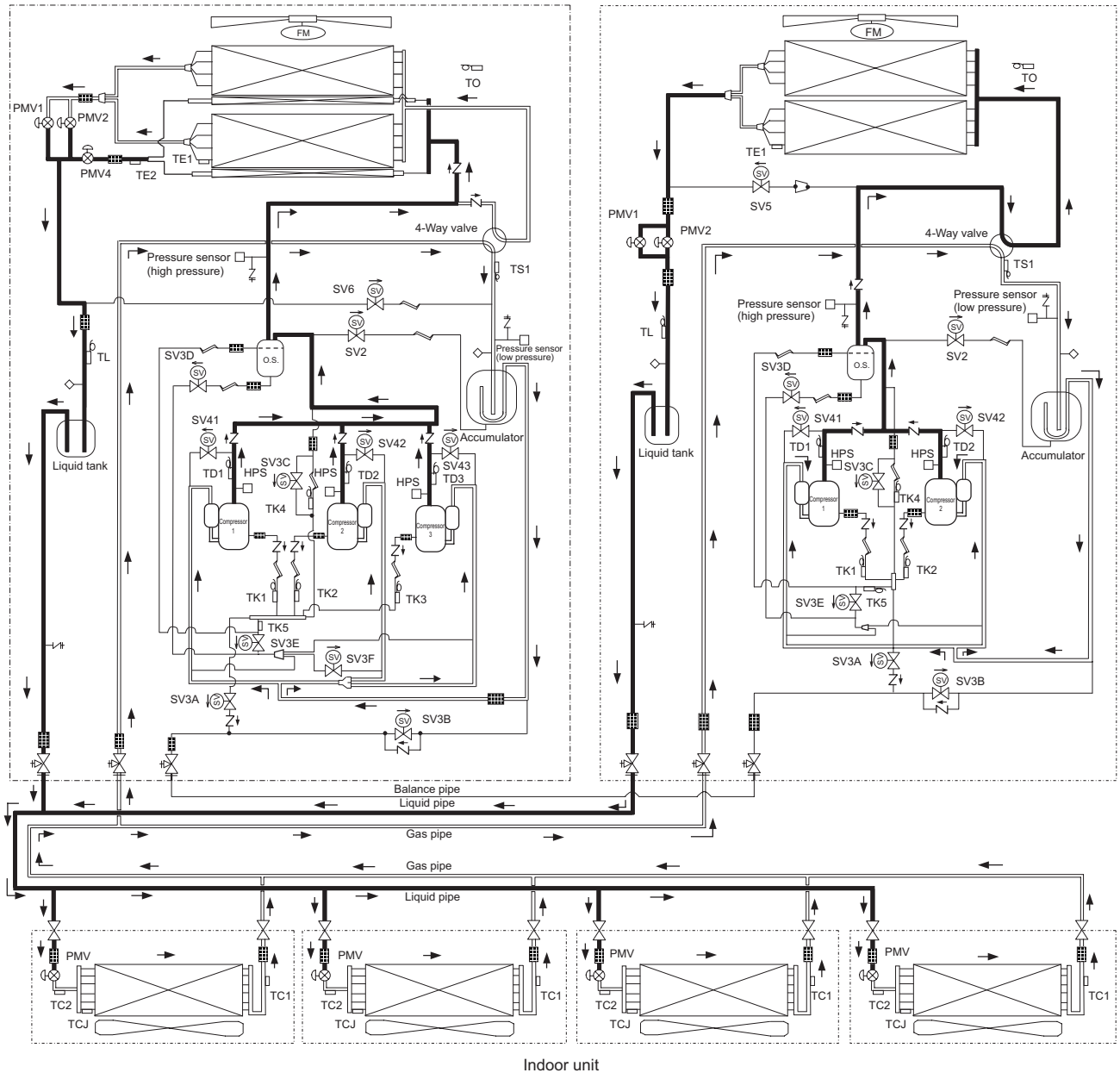

High-pressure gas or condensate liquid refrigerant

Evaporative gas refrigerant (low-pressure gas)

Normal refrigerant line

Note: With a 096 type or 114 type outdoor unit, the main heat exchanger and sub-heat exchanger may be switched over depending on the outside temperature and air conditioning loads.

Note: The "header unit" is the outdoor unit to which the indoor-outdoor communication line is connected. All other outdoor units are called "follower units".

(The diagram shows a 168 type as an example.)

5-3. Normal operation (HEAT mode)

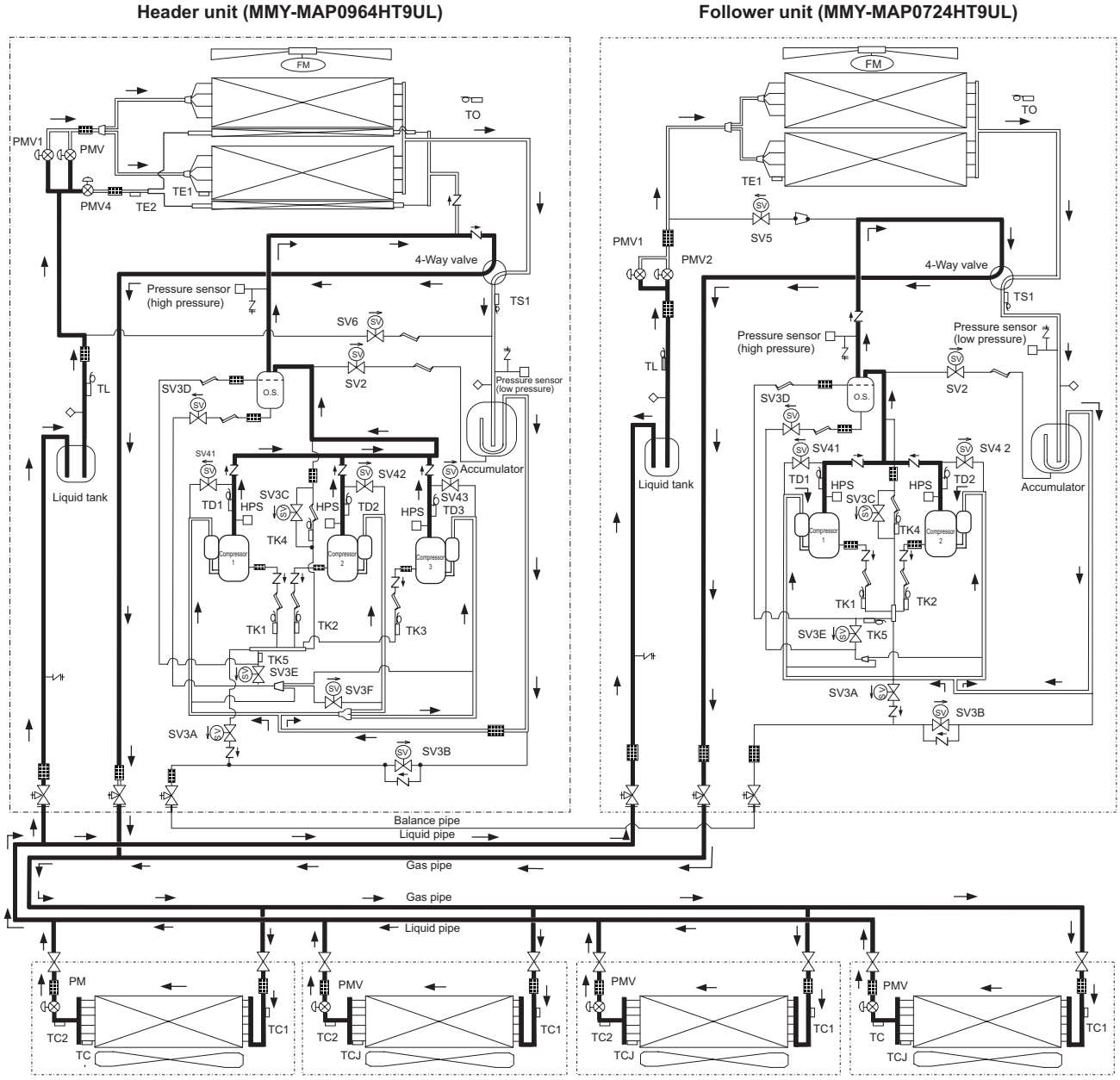

Note: The "header unit" is the outdoor unit to which the indoor-outdoor communication line is connected. All other outdoor units are called "follower units".

(The diagram shows a 168 type as an example.)

5-4. Emergency operation (cooling operation under header outdoor unit backup scenario)

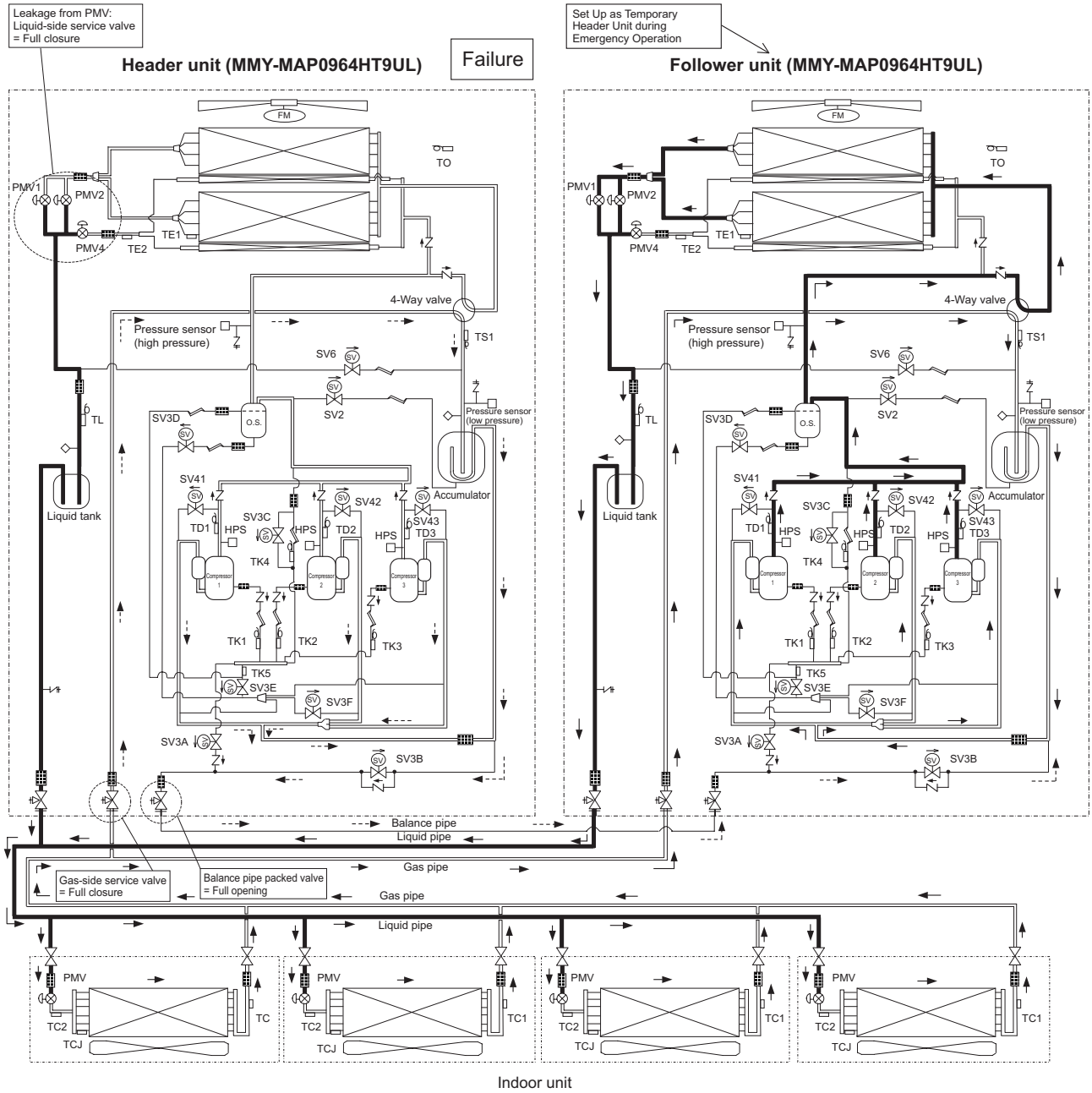

High-pressure gas or condensate liquid refrigerant

Evaporative gas refrigerant (low-pressure gas)

Normal refrigerant line

Refrigerant recovery line

Note: The "header unit" is the outdoor unit to which the indoor-outdoor communication line is connected. All other outdoor units are called "follower units".

(The diagram shows a 192 type as an example.)

5-5. Emergency operation (heating operation under header outdoor unit backup scenario)

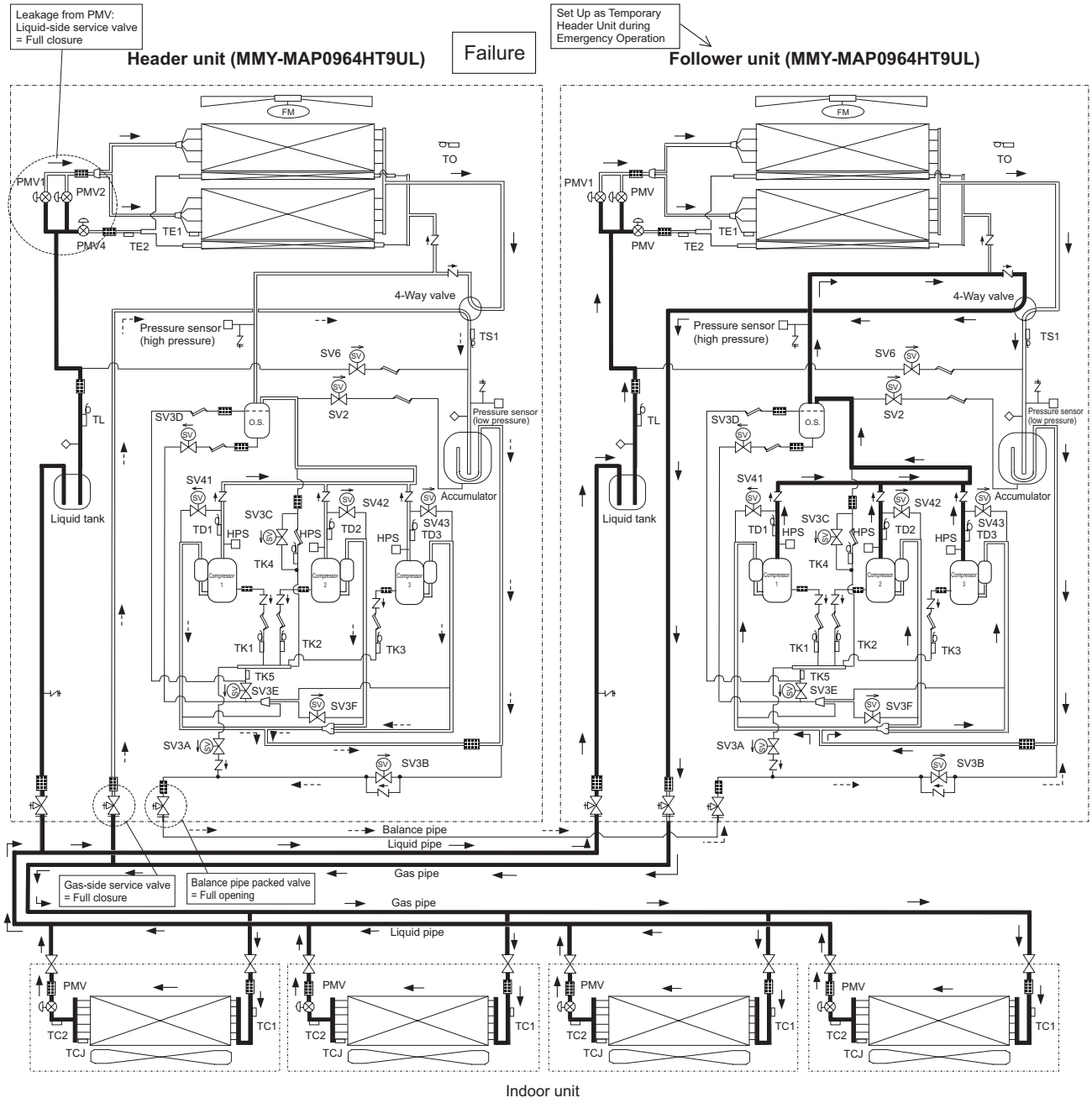

High-pressure gas or condensate liquid refrigerant

Evaporative gas refrigerant (low-pressure gas)

Normal refrigerant line

Refrigerant recovery line

Note: The "header unit" is the outdoor unit to which the indoor-outdoor communication line is connected. All other outdoor units are called "follower units".

(The diagram shows a 192 type as an example.)

5-6. Refrigerant recovery from failed outdoor unit (pump-down operation under follower outdoor unit backup scenario)

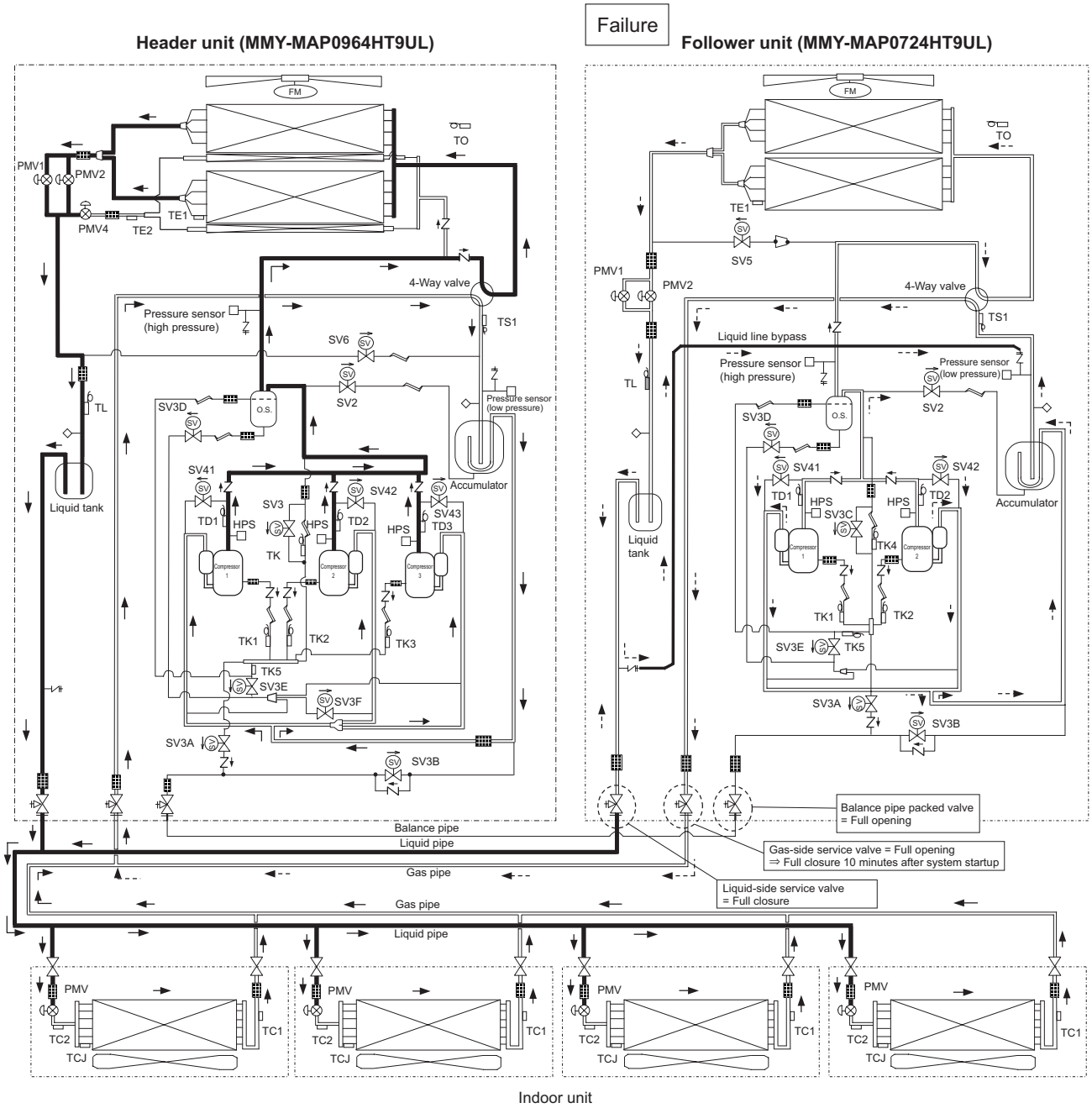

Note: The "header unit" is the outdoor unit to which the indoor-outdoor communication line is connected. All other outdoor units are called "follower units".

(The diagram shows a 168 type as an example.)

6 Control Outline

■ Outdoor unit

Item	Description of operation, numerical data, and other information	Remarks
1. Pulse motor valve (PMV) control	1. PMV1, 2 control (PMV1 and 2) 1) During air conditioner operation, the pulse count of a PMV (pulse motor valve) is controlled between 90 and 1000. 2) During cooling, the PMV opening is controlled on the basis of measurements provided by the TL temperature sensor and the Pd pressure sensor (under cool control). 3) During heating, the PMV opening is controlled on the basis of measurements provided by the TS and TD temperature sensors and the PS pressure sensor (super heat control). 4) PMVs are fully closed when the air conditioner is in thermo OFF state or upon being turned off normally or shut down due to an abnormality. 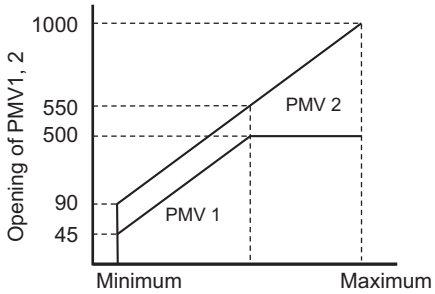 2. PMV4 control (applicable only to MMY-MAP0964HT9UL, MMY-MAP1144HT9UL) 1) When using a small-capacity split-type heat exchanger (mainly a sub-heat exchanger to a combination of a sub-heat exchanger and main heat exchanger) during cooling, the pulse count of the PMV (pulse motor valve) is controlled between 45 and 500. The PMV4 opening is controlled on the basis of measurements provided by the TE1 and TE2 temperature sensors. 2) During heating, the PMV4 may be used as a pressure-relief bypass valve by opening it to a certain degree. 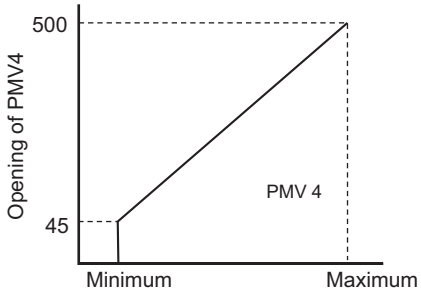 	• During heating, PMV control may be provided with PMV1 alone, operated at 45 pulses (minimum), with PMV2 turned off.

Item	Description of operation, numerical data, and other information	Remarks
2. Outdoor fan control	1. Cooling fan control 1) Outdoor fan speed (mode) is controlled on the basis of measurements provided by the Pd pressure sensor. 2) For a specified period after the start of cooling operation, the header outdoor unit controls outdoor fan speed (mode) on the basis of measurements provided by the Pd pressure sensor. Follower units, on the other hand, control outdoor fan speed (mode) on the basis of measurements provided by the TE1 temperature sensor. 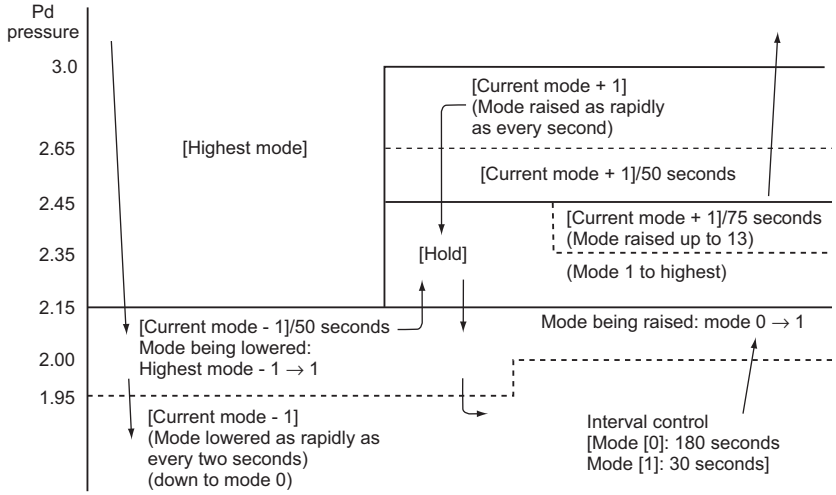 * Available control modes are 0 (at rest) to 63. 2. Heating fan control 1) Outdoor fan speed (mode) is controlled on the basis of measurements provided by the TE1 temperature sensor. 2) If TE1 > 25°C is continuously detected for 8 minutes, the fan may be turned off. However, this condition is the same as normal thermo OFF, so that fan operation will be restarted. 3) For a specified period after air conditioner startup and during defrosting, this control is disabled. 4) When refrigerant is in extremely short supply, this control may cause the air conditioner to be repeatedly turned on and off. TE1 temperature °F (°C) 77 (25) 46.4 (8) 42.8 (6) 39.2 (4) 35.6 (2) Zone A: Lowest mode, timer count for forced compressor shutdown Zone B: -2/15 seconds (down to lowest mode) Zone C: -1/15 seconds (down to lowest mode) Zone D: Hold (staying at current mode) Zone E: +1/15 seconds (up to highest mode) Zone F: Highest mode 3. Control while follower unit at rest The fan is operated at mode 1 to prevent the accumulation of refrigerant inside the outdoor heat exchanger.	• The fan speed corresponding to the highest mode varies with the HP capacity of the outdoor unit. • The fan speed corresponding to the highest mode varies with the HP capacity of the outdoor unit.
3. Capacity control	1) The compressors of the header and follower units are controlled on the basis of capacity demand issued by indoor controllers. 2) The two or three compressors featured in an outdoor unit operate on a rotational basis, so that, every time they come to a stop, their order of startup changes. 3) Where two or more follower units are connected, every time the system goes thermo OFF or all the compressors featured in the follower units come to a stop, the priority startup order of the follower units changes, as they are also subject to rotational operation.	

Item	Description of operation, numerical data, and other information	Remarks
4. Oil level detection control	1) Judgment as to whether an optimum amount of oil is present in the compressor cases is made on the basis of the temperature readings of sensors TK1 to TK5. This control function is performed by the header unit and each follower unit individually. 2) In concrete terms, judgment is based on the relationship between the temperature measurements provided by TK1, TK2 or TK3, on the one hand, and those provided by TK4 or TK5, on the other. If there is depletion, oil equalization control takes over. 3) This control function is performed whenever at least one compressor is in operation. 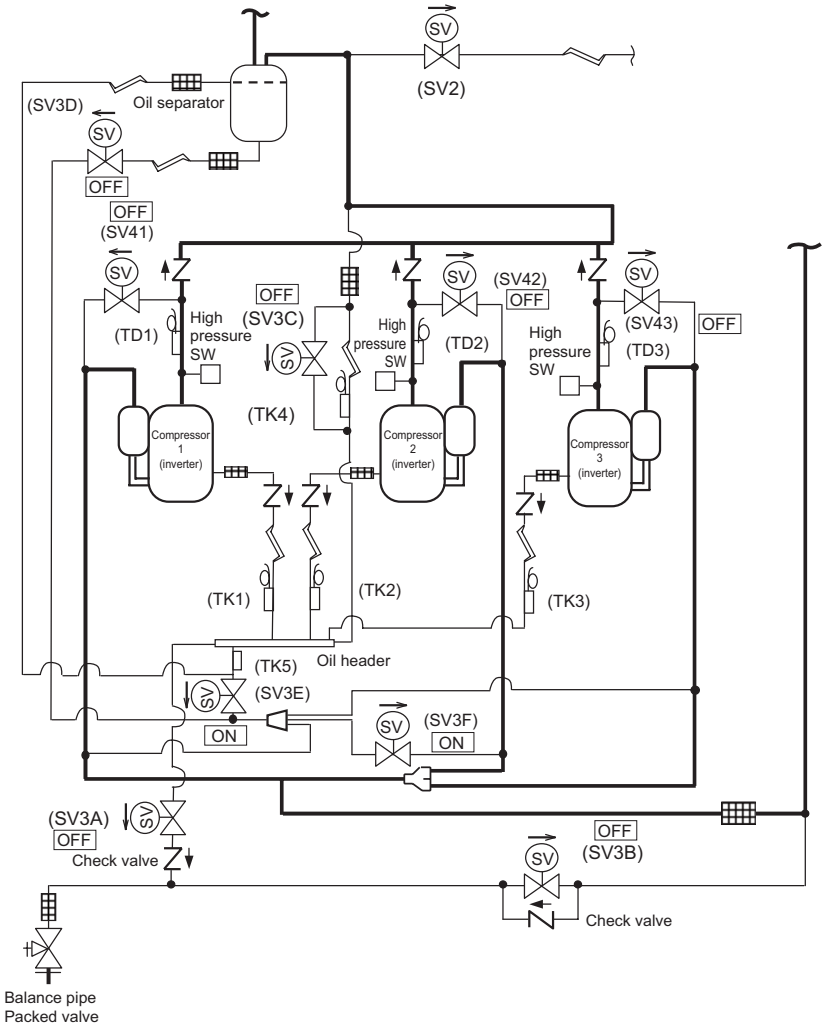 	• Oil level detection takes place regardless of the number of compressors, whether it be one, two or three. • Rough guide for oil level judgment 1) If TK1 - TK4 ≧ 57.2 °F (14 °C), oil level of compressor 1 is optimum. 2) If TK2 - TK4 ≧ 57.2 °F (14 °C), oil level of compressor 2 is optimum. 3) If TK3 - TK4 ≧ 57.2 °F (14 °C), oil level of compressor 3 is optimum.

Item	Description of operation, numerical data, and other information	Remarks
5. Oil equation control	This control function is aimed at preventing compressors from running out of oil by evening out the oil supply to outdoor units, and is basically performed by opening/closing solenoid valves SV3A, SV3B, SV3C, SV3D, and SV3F. There are three control patterns as described below. (For a schematic diagram of oil equalization control, see page 46.)	
	1. Preparatory control If the oil level judgment result in the memory continues to be “low” for 30 seconds, SV3B is turned on, with SV3D turned on and off intermittently.	• Oil accumulated in the oil separator is returned to the compressor.
	2. Oil equation control This control function is performed to transfer oil to the outdoor unit whose oil level is low from other outdoor units. It takes place whenever the header unit registers a low oil level result while at least one of its compressors is turned on or at least one of the follower units issues an oil level equation request. This control function does not apply to a header unit-only system (no follower units connected).	• This is normal oil equalization control.
	3. Oil depletion protection control This control function is performed if oil equation control fails to achieve an optimum oil level. In concrete terms, if a low oil level situation continues for 30 minutes, the unit is brought to a protective shutdown, followed by a restart 2 minutes and 30 seconds later. If protective shutdown is repeated three times, the error is confirmed as final. (There will be no more restarts.) The error code is “H07”.	• This protective control is performed when a prolonged low oil level is detected.
6. Refrigerant/ oil recovery control	1. Cooling oil (refrigerant) recovery control Performed during cooling, this control function aims to: periodically collect any refrigerating oil condensate that has built up in inter-unit gas pipes and indoor units and return it to outdoor units when the compressor operation command is inadequate; and prevent the accumulation of refrigerant in outdoor heat exchangers while cooling operation is in progress under low outside air temperature conditions. It is managed by the header outdoor unit. 1) Control commencement conditions • When cooling operation has continued for at least 2 hours • When cooling operation has started (compressors have just been turned on, though this does not always happen depending on outside air temperature conditions). 2) Control details • All compressors currently in operation are operated at the minimum speed, with those currently not in operation turned on. • Indoor units are set to the cooling oil (refrigerant) recovery control mode, with their indoor PMVs opened to a certain degree. • Compressors are operated at the target speed. • After recovery control is performed for a specified period of time, it is terminated, and normal cooling operation resumes.	• Cooling oil recovery control takes place approximately every 2 hours. • Control duration is about 2 to 5 minutes, though it varies according to the operating conditions of the system.
	2. Heating refrigerant (oil) recovery control Performed during heating, this control function aims to recover any liquid refrigerant trapped inside indoor units that have been turned off. It also serves the additional purposes of recovering indoor/outdoor refrigerant after defrosting and recovering oil present in outdoor heat exchangers during heating overload operation. This control function is managed by the header outdoor unit. 1) Control commencement conditions • When heating operation has started (compressors have just been turned on) • When heating takes over upon completion of defrosting • When heating operation has continued for 60 minutes 2) Control details • All compressors currently in operation are operated at the minimum speed, with those currently not in operation turned on. • Indoor units are set to the heating refrigerant (oil) recovery control mode, with their indoor PMVs opened to a certain degree. • Compressors are operated at the target speed. • Upon completion of refrigerant recovery for all the indoor units, normal cooling operation resumes.	• Heating oil recovery control takes place approximately every hour. • Control duration is about 2 to 10 minutes, though it varies according to loading conditions. • Compressor rotational speed varies with control conditions, indoor unit capacity, and outdoor unit specification.

Item	Description of operation, numerical data, and other information	Remarks
7. Defrosting control (reverse defrosting method)	1. Defrosting commencement conditions • During heating operation, the cumulative duration of operation in which TE1 sensor temperature falls below frost formation temperature is measured, and when this reaches 55 minutes, defrosting control is introduced. (Just after startup or upon changeover from cooling to heating, the target cumulative duration is 25 minutes.) * If the outdoor units are a combination of different models, all the units begin engaging in defrosting control as soon as one of them satisfies defrosting commencement conditions.	• Frost formation temperature is 29.3 °F (-1.5 °C). • If the outdoor units are a combination of different models, defrosting operation, once started, cannot be manually terminated for about 2 minutes.
	2. Details of defrosting control 1) All compressors currently in operation are operated at the minimum speed. 2) When a specified amount of time passes from the time the compressors reached the minimum speed, the outdoor fans are turned off by closing the 4-way valves. 3) All compressors currently not in operation are turned on and operated at the target rotational speed for defrosting control.	• To protect the refrigerating cycle circuit, the fan mode may be controlled during defrosting.
	3. Defrosting termination conditions • Defrosting termination conditions are met when the TE1 temperature sensor measurement reaches a specified value (roughly 53.6 °F (12 °C)) a certain period of time after the commencement of defrosting control. In that event, defrosting termination control takes over. * If the outdoor units are a combination of different models, defrosting termination control commences when all the units satisfy the defrosting termination conditions. As long as one or more outdoor units are yet to satisfy the defrosting termination conditions, those that have engage in standby operation.	• During defrosting control, compressors are controlled so that their speeds do not exceed 76.6 rps.
	4. Details of defrosting termination control 1) Compressors are operated at the standby operation speed. 2) When a specified amount of time passes, the 4-way valves are opened. 3) Indoor heating refrigerant recovery control is performed. For control details, see “ 6. Refrigerant/oil recovery control”.	• During standby operation, compressor speed is in the 24-33.5 rps range. (It varies from outdoor unit to outdoor unit.)

<table>
<tr><th>Item</th><th>Description of operation, numerical data, and other information</th><th>Remarks</th></tr>
<tr><td>8. Release valve control</td><td>

1. SV2 gas balance control

This control function is aimed at achieving gas balance by opening SV2 while compressors are turned off so as to reduce their startup load the next time they are turned on. It is individually performed by the header outdoor unit and each follower outdoor unit.

1) Control conditions
- In cooling, compressors have been turned off.
- In heating, the header unit has been shut down.

2) Control details
- The control point is changed according to ΔP (Pd pressure - Ps pressure) registered just before the compressors were turned off.
- When ΔP ≧ P1, SV2 is opened. When this results in ΔP < P2, SV2 is closed.
- When ΔP < P1, SV2 is closed.

(Unit: psi (MPa))

<table>
<tr><td rowspan="4">Control points for Pd pressure P1, P2</td><td colspan="2">Heating</td><td colspan="4">Cooling</td></tr>
<tr><td colspan="2">Header unit compressors</td><td colspan="2">Header unit compressors</td><td colspan="2">Header unit compressors</td></tr>
<tr><td colspan="2">OFF</td><td colspan="2">OFF</td><td colspan="2">ON</td></tr>
<tr><td>P1</td><td>P2</td><td>P1</td><td>P2</td><td>P1</td><td>P2</td></tr>
<tr><td>Header unit</td><td>188.5 (1.3)</td><td>159.5 (1.1)</td><td>188.5 (1.3)</td><td>159.5 (1.1)</td><td>—</td><td>—</td></tr>
<tr><td>Follower unit</td><td>188.5 (1.3)</td><td>159.5 (1.1)</td><td>188.5 (1.3)</td><td>159.5 (1.1)</td><td>72.5 (0.5)</td><td>58.0 (0.4)</td></tr>
</table>

2. SV2 high pressure release control

This control function is aimed at mitigating pressure rise while a compressor is in operation at low speeds.

1) Control conditions
- Heating operation is in progress (except periods of defrosting control).
- A lone compressor from the header unit is in operation at low speeds of up to 36 rps.

2) Control details
- When Pd pressure becomes ≧ 493 psi (3.4 MPa), SV2 is opened.
- When Pd pressure becomes ≦ 406 psi (2.8 MPa), SV2 is closed.

3) Termination conditions
- Shutdown, thermo OFF, defrosting operation, or cooling operation.
- The number of header unit compressors in operation increases to two or more.
- At least one follower unit compressor is turned on.
- The speed of the compressor rises to 40 rps or more.

3. SV2 low pressure release control

This control function is aimed at preventing a rapid fall in pressure during transient operation. It is individually performed by the header outdoor unit and each follower outdoor unit.

The control is always provided except during periods of stoppage or thermo OFF.

1) Control details
- When Ps pressure becomes ≦ 23.2 psi (0.16 MPa), SV2 is opened.
- When Ps pressure becomes > 29 psi (0.20 MPa), SV2 is closed.

</td><td></td></tr>
</table>

Item	Description of operation, numerical data, and other information	Remarks
8. Release valve control (cont'd)	4. SV41, 42, 43 low pressure release control This control function is aimed at providing low pressure protection, and is individually performed by the header unit and each follower unit. The control takes place during defrost operation, heating startup pattern control operation, and cooling operation. 1) Control details (heating) When Ps pressure becomes ≦ 14.5 psi (0.1 MPa), SV41, 42 and 43 are opened; when Ps pressure becomes ≧ 21.8 psi (0.15 MPa), SV41, 42 and 43 are closed. 2) Control details (cooling) When Ps pressure and Pd pressure become ≦ 20.3 psi (0.14 MPa) and ≦ 261 psi (1.8 MPa), respectively, SV41 and 42 are opened; when Ps pressure and Pd pressure become ≧ 27.6 psi (0.19 MPa) and ≧ 319 psi (2.2 MPa), respectively, SV41 and 42 are closed. 5. SV5 high pressure release control This control function is aimed at mitigating pressure rise and is only performed by the header unit. 1) Control details (heating) When Pd pressure and compressor speed become ≧ 493 psi (3.4 MPa) and ≦ 38 rps, respectively, during heating, with a single compressor in operation, SV5 is opened; when Pd pressure becomes ≧ 391.5 psi (2.7 MPa), or compressor speed ≧ 64 rps, SV5 is closed.	
9. High pressure release compressor shutdown control	This control function is aimed at automatically shutting down a compressor in an outdoor unit depending on Pd pressure. It is individually performed by the header unit and each follower unit. 1) Control details • Compressors are shut down when Pd pressure reaches or exceeds P0. • The compressor restart prevention timer (2 minutes 30 seconds) is set, and the control terminated.	• When Pd ≧ P0 = 500.3 psi (3.45 MPa), compressor No. 2 or No. 3 (the last one of three compressors in terms of startup order in a three compressor configuration) is shut down. • When Pd ≧ P0 = 507.5 psi (3.5 MPa), compressor No. 1 (the first compressor in terms of startup order) is shut down.
10. Case heater control	There are two types of case heaters: a compressor case heater and an accumulator case heater. This control function is aimed at preventing the accumulation of refrigerant in those cases, and is performed by all outdoor units. If the power supply has not been turned on for a specified period before a post-installation test run, compressor failure may occur. Similarly, when starting compressors after a long period of no power supply, it is recommended that the power supply be turned on for a while before operation is resumed, just like a post-installation test run. This control function is sometimes used alongside an electrical charging of the compressor motor windings. In this case, a charging sound may be heard, but this is normal. 1) Control details • The heaters are turned on while the compressors are turned off. • The heaters are turned off when T0 sensor temperature becomes ≧ 82.4 °F (28 °C), and are turned back on when T0 sensor temperature becomes ≦ 77 °F (25 °C). • When the compressors are turned on, the heaters are kept on for 10 minutes.	

<table>
<tr><th>Item</th><th>Description of operation, numerical data, and other information</th><th>Remarks</th></tr>
<tr>
<td>11. A3-IPDU control</td>
<td>
IPDU controls inverter compressors by issuing commands relating to compressor speeds, speed increases/decreases, and current release control values via the interface P.C. board.
The main control functions of the IPDU P.C. board are described below.
1. Current release control
To prevent inverter input current from exceeding the specified value, output frequency is controlled with AC input current as detected by T02 mounted on the control P.C. board.
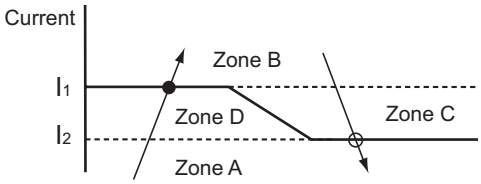

Zone A: Compressors are operated normally.
Zone D: The current operating frequency is maintained.
Zone B: Operating frequency is lowered.
Zone C: The lowering of operating frequency is halted to maintain the current frequency.
Current control values for various outdoor units are shown below.
<table>
<tr><th>Outdoor unit capacity type</th><th>I1</th><th>I2</th></tr>
<tr><td>114</td><td>14.0</td><td>13.5</td></tr>
<tr><td>096</td><td>13.2</td><td>12.7</td></tr>
<tr><td>072</td><td>14.0</td><td>13.5</td></tr>
</table>
2. Heat sink temperature detection control
1) This control function is aimed at protecting IGBT from overheating via a thermistor (TH sensor) mounted in the compressor drive module (Q201) of A3-IPDU.
2) When TH ≧ 185 °F (85 °C) is detected, the fan operation mode is raised by one step, followed by a series of additional step-ups right up to the highest mode at a rate of one step/5 seconds.
3) After step 2), the normal fan mode is restored when TH falls to < 185 °F (85 °C).
4) When TH ≧ 221 °F (105 °C), compressors are shut down.
5) Compressors are restarted 2 minutes and 30 seconds later, with an error count of 1 recorded. If this is repeated four times (error count reaches 4), the error is confirmed as final. The error [P07] is displayed. (There will be no more restarts.)
* Possible causes of the confirmed error include a heat buildup in the outdoor unit, fan abnormality, blockage of the cooling duct, and IPDU P.C. board fault.
* The TH temperature used in this control function is the highest registered by A3-IPDU1, A3-IPDU2, and A3-IPDU3.
3. Overcurrent protection control
1) When the overcurrent protection circuit on an IPDU P.C. board detects an abnormal current, the compressor is shut down.
2) The compressor is restarted 2 minutes and 30 seconds later, with an error count of 1 recorded. If the compressor successfully operates for at least 10 minutes after a restart, the error count is cleared.
3) If the error count reaches 8, the error is confirmed as final.
4. High pressure SW control
1) When the high pressure SW of an inverter compressor is activated, the compressor is shut down with an error count of 1 recorded.
2) The compressor is restarted 2 minutes 30 seconds later, and, if it successfully operates for at least 10 minutes, the error count is cleared.
3) If the error count reaches 4, the error is confirmed as final. The error “P04” is displayed.
</td>
<td>
• A3-IPDU1, 2 and 3 are each provided with a TH sensor.

• Connected to A3-IPDU, the high-pressure SW is normally closed.
</td>
</tr>
</table>

<Other points to note>

1 Cooling operation under low outside temperature conditions

1) If pressure falls to extremely low levels, indoor units may be shut down via freeze prevention control based on the indoor TC sensor.
2) If pressure falls to extremely low levels, frequency may be reduced via cooling capacity control.
3) When the discharge temperature sensor reading falls below 140 °F (60 °C), the frequency may be increased above the level called for by the command received from the indoor unit.

2 PMV (Pulse Motor Valve)

1) When the power is turned on, PMVs generate a tapping sound as they are initialized. If this sound is not heard, there is a possibility of faulty PMV operation. However, in a noisy environment, it may simply be drowned out by ambient noise.
2) Do not separate the actuator (head section) from any PMV during operation. It may result in an inaccurate opening.
3) When transporting (relocating) the set, do not, under any circumstances, keep the actuator separated. It may damage the valve by causing it to close and exposing it to pressure from sealed liquid.
4) When reattaching the actuator after its removal, push it in firmly until a click sound is heard. Then, turn the power off and back on again.

<Schematic diagram for oil equation control>

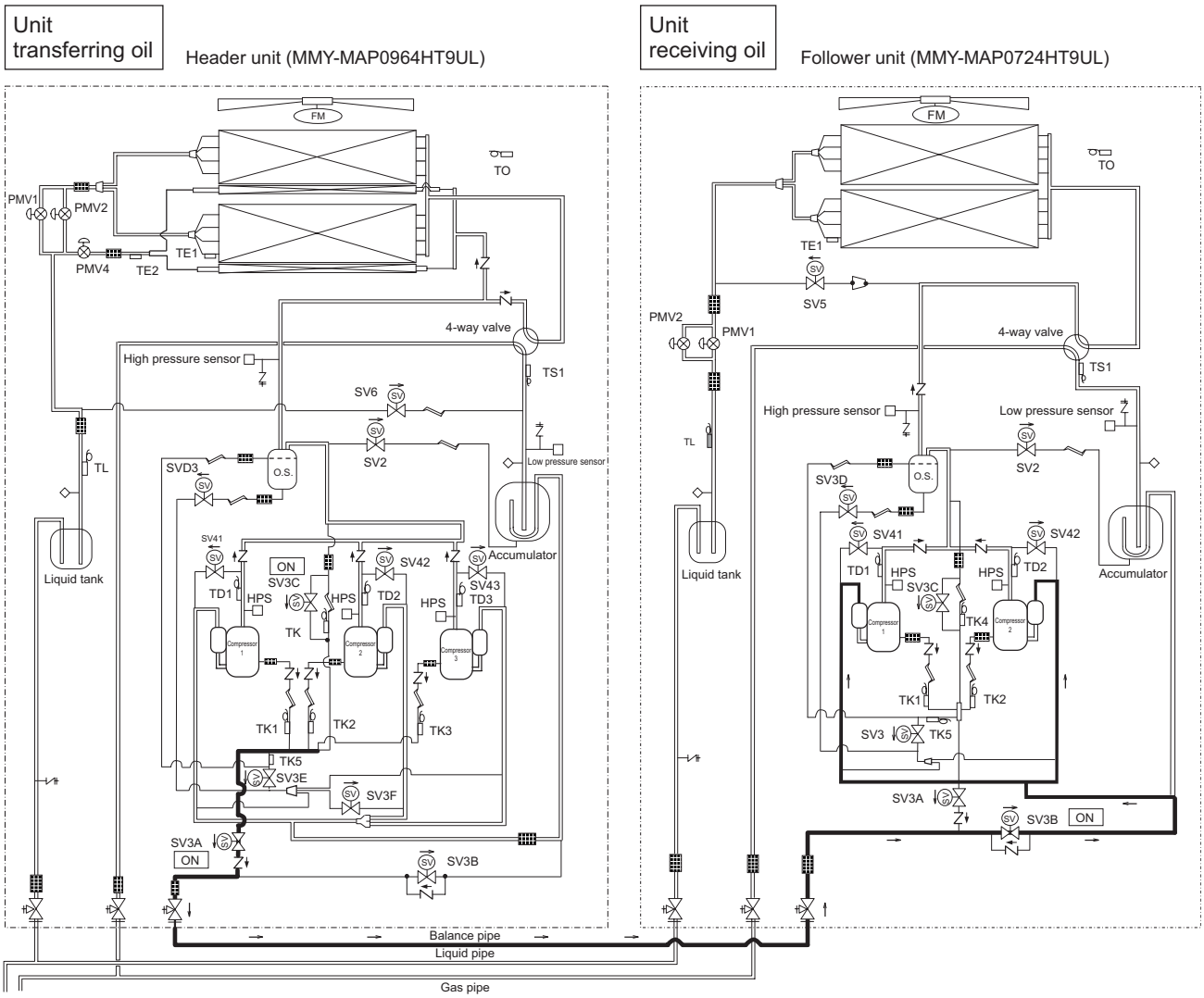

7 Applied Control and Functions

7-1. Applied control for outdoor unit

The outdoor fan high static pressure support and priority operation mode setting (cooling / heating / number of units / or priority indoor unit) functions are made available by setting relevant switches provided on the interface P.C. board of the outdoor unit.

7-1-1. Outdoor fan high static pressure shift

Purpose / characteristics

This function is used when connecting a duct to the discharge port of an outdoor unit (as part of, for example, unit installation on the floor by floor installation.)

Setup

Turn ON the DIP switch [SW10, Bit 2] provided on the interface P.C. board of the outdoor unit.
This function must be enabled with every discharge duct connected outdoor unit for both of the header and follower units.

Specification

Increase the speed of the propeller fan units on the outdoor fan to allow the installation of a duct with a maximum external static pressure not greater than specified in the table below. If a discharge duct with a resistance greater than 0.06 InWG (15 Pa) is to be used, enable this function. The maximum external static pressures of base units are shown below (Table 1).

Table 1: Maximum External Static Pressures of Base Outdoor Units

Model	MMY-	MAP0724HT9UL	MAP0964HT9UL	MAP1144HT9UL
Maximum external static pressure		0.2 InGW (50 Pa)	0.2 InGW (50 Pa)	0.2 InGW (50 Pa)
(*) Outdoor unit air flow	(CFM)	5800	6600	7060

(*) Calculate duct resistance from outdoor unit air flow.

7-1-2. Priority operation mode setting

Purpose / characteristics

This function allows switching between priority cooling and priority heating.
Four patterns of priority operation mode setting are available as shown in the table below. Select a suitable priority mode according to the needs of the customer.

Setup

⚠ CAUTION

In the case of the priority indoor unit mode, it is necessary to set up the specific indoor unit chosen for priority operation (a single unit only).

(1) Outdoor unit setup method (header unit)

SW11		Operation
Bit 1	Bit 2	
OFF	OFF	Priority heating (factory default)
ON	OFF	Priority cooling
OFF	ON	Priority operation based on No. of units in operation (priority given to the operation mode with the largest share of units in operation)
ON	ON	Priority indoor unit (priority given to the operation mode of the specific indoor unit set up for priority operation)

(2) Indoor unit setup method for priority indoor unit mode

The setting can be changed only when the system is at rest. (Be sure to turn off the system prior to this operation.)

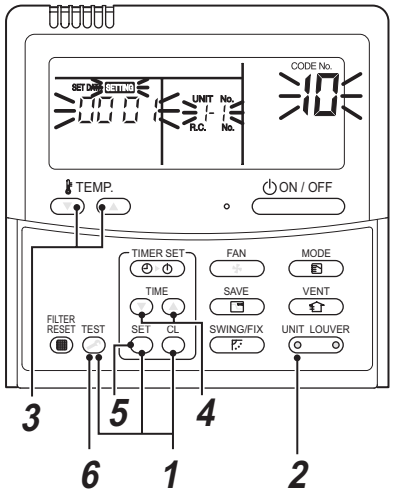

1 Push the TEST + SET + CL buttons simultaneously and hold for at least 4 seconds. The display window will start flashing in a little while.

Verify that the displayed CODE No. is 10.

- If the displayed CODE No. is not 10, press the TEST button to erase the display and repeat the procedure from the beginning.
  (Note that the system does not respond to remote controller operation for about 1 minute after the TEST button is pushed.)
  (In the case of group control, the indoor unit No. displayed first indicates the header unit.)

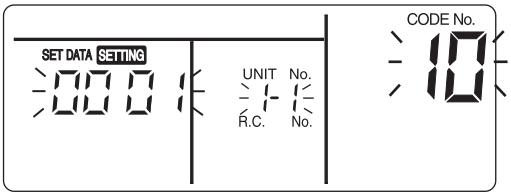

2 Each time the UNIT LOUVER button is pushed, one of the indoor unit Nos. under group control is displayed in turn. Select the indoor unit whose setting is to be changed.

The fan and flap of the selected indoor unit then come on, so that the position of this unit can be confirmed.

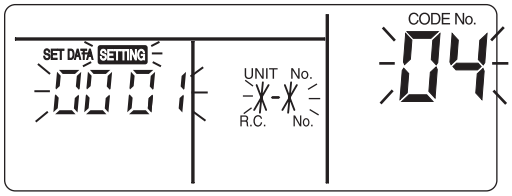

3 Use the TEMP. button to select the CODE No. 04.

4 Use the TIME button to select the SET DATA 0001.

Priority set 0001 No priority set 0000

5 Push the SET button.

The setup is finished when the display changes from flashing to steady.

6 Upon finishing the setup, push the TEST button. (This finalizes the setting.)

When the TEST button is pushed, the display goes blank, and the system returns to normal off state.

(Note that the system does not respond to remote controller operation for about 1 minute after the TEST button is pushed.)

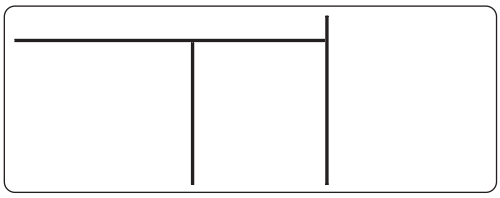

NOTE

Priority can be given to only one indoor unit. If more than one indoor unit is accidentally set to priority, an error code (L5 or L6: Duplicated indoor unit priority setting) will be displayed.

All units displaying L5 have been set to 0001 (priority). Keep the unit to which priority should be given as it is, and change the value back to 0000 (no priority) for all the rest.

Error code	Description
L5	Duplicated indoor unit priority setting (The unit is set to 0001.)
L6	Duplicated indoor unit priority setting (The unit is set to 0000.)

7-2. Applied control of outdoor unit

Optional control P.C. boards provide access to a range of functions as listed below.

No.	Function	Outdoor unit for control P.C. board connection	Control P.C. board to be used			Outdoor unit interface P.C. board setting*			
			PCDM4UL	PCMO4UL	PCIN4UL	Connector No.	DIP SW No.	Bit	Jumper to be removed
1	Power peak-cut Control (Standard)	Header unit	✓	–	–	CN513(blue)	SW07	1	–
	Power peak-cut Control (For one input function)	Header unit	✓	–	–	CN513(blue)	SW07	1	J16
2	Power peak-cut Control (Enhanced Functions)	Header unit	✓	–	–	CN513(blue)	SW07	1.2	–
3	Snowfall Fan Control	Header unit	–	✓	–	CN509(black)	–	–	–
4	External master ON / OFF Control	Header unit	–	✓	–	CN512(blue)	–	–	–
5	Night operation (sound reduction) Control	Header unit	–	✓	–	CN508(red)	–	–	–
6	Operation Mode Selection Control	Header unit	–	✓	–	CN510(white)	–	–	–
	Operation Mode Selection Control (forced choice)	Header unit	–	✓	–	CN510(white)	–	–	J01
7	Error / Operation output	Header unit	–	–	✓	CN511(green)	–	–	–
8	Compressor Operation Output	Individual outdoor unit	–	–	✓	CN514(green)	–	–	–
9	Operating Rate Output	Header unit	–	–	✓	CN514(green)	SW16	1	–

Layout of Outdoor Unit Interface P.C. Board

* DIP switch settings and jumper wire statuses vary from function to function.

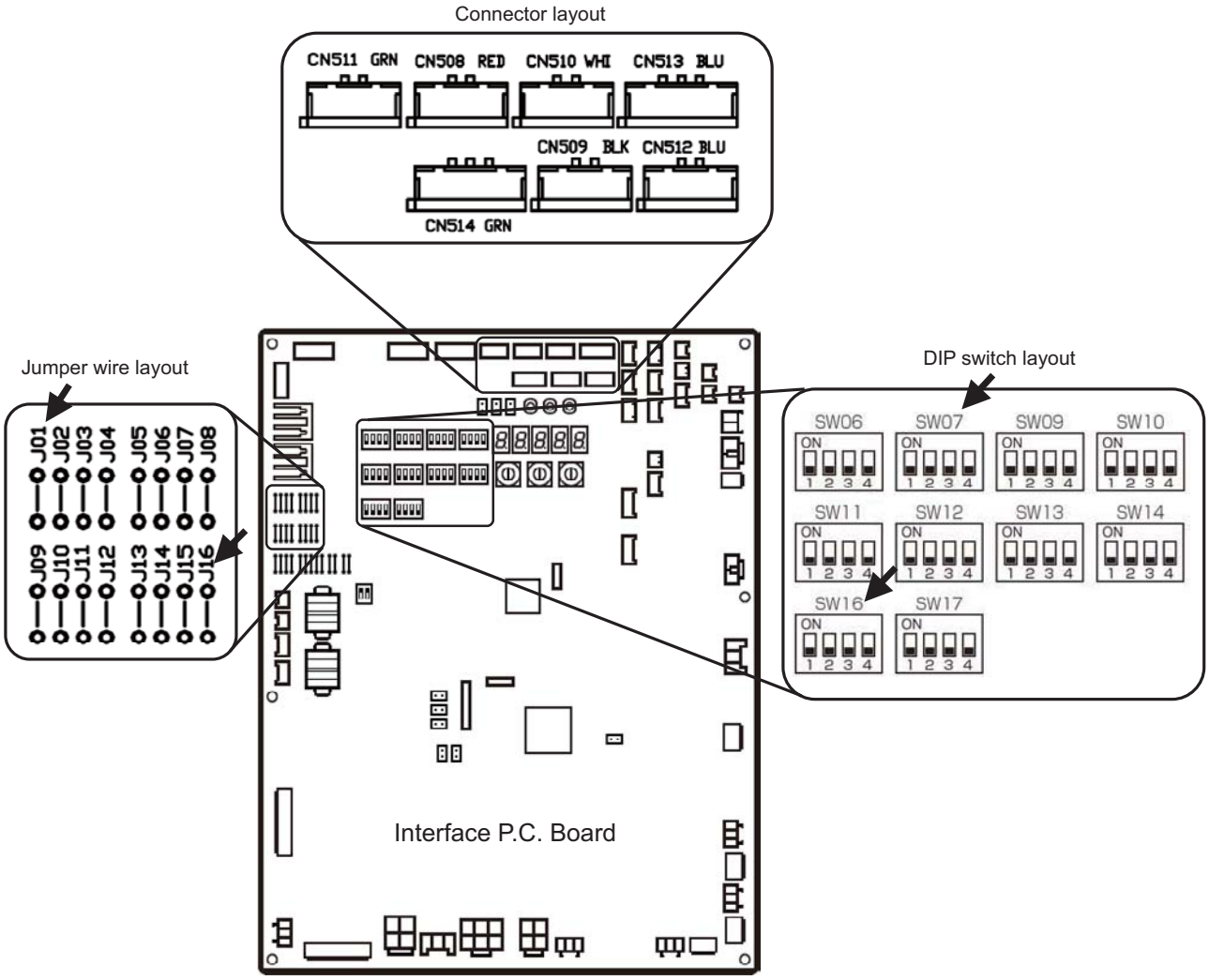

7-2-1. Power peak-cut control (standard)

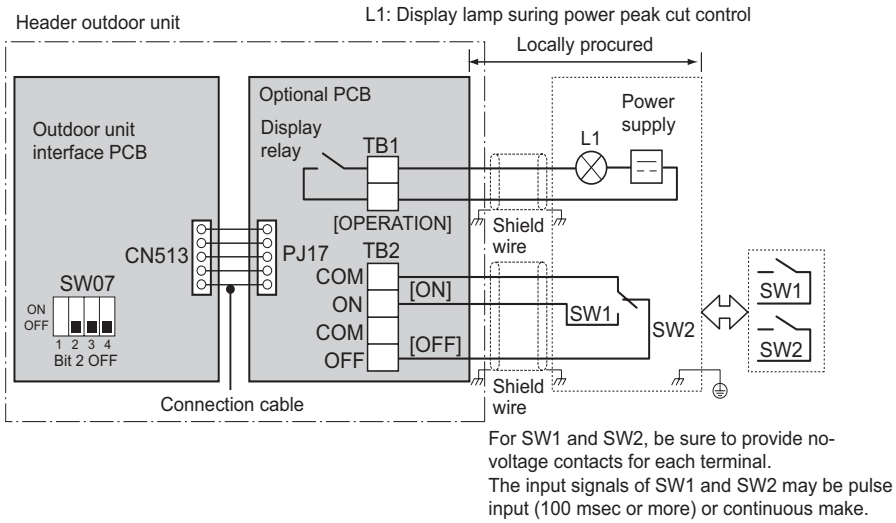

Operation

An external power peak-cut control signal limits the peak capacity of the outdoor unit.

L1: Power peak-cut control indication lamp

SW1: Power peak-cut control ON switch (ON as long as target power peak-cut control has been reached or exceeded, normally OFF)*1

SW2: Power peak-cut control OFF switch (OFF as long as target power peak-cut control has not been reached or exceeded, normally ON)*1

*1 The inputs of SW1 and SW2 can be either pulse (100 msec or wider) or step signals.
Do not turn on SW1 and SW2 simultaneously.

* Be sure to provide a contact for each terminal.

Power peak-cut control settings

Power peak-cut control P.C. board	SW1	SW2	L1	Interface P.C. board of header outdoor unit	
				SW07 Bit 1 OFF	SW07 Bit 1 ON
Power peak-cut control ON signal received	ON	OFF	ON	0% (forced stop)	60% capacity (upper limit regulated)
Power peak-cut control OFF signal received	OFF	ON	OFF	100% (normal operation)	100% (normal operation)

Two-core cable support

SMMS-i models allows ON/OFF power peak-cut control to be implemented using a power peak-cut control ON input (SW1) alone, provided that the J16 jumper wire on the interface P.C. board of the header outdoor unit has been removed.

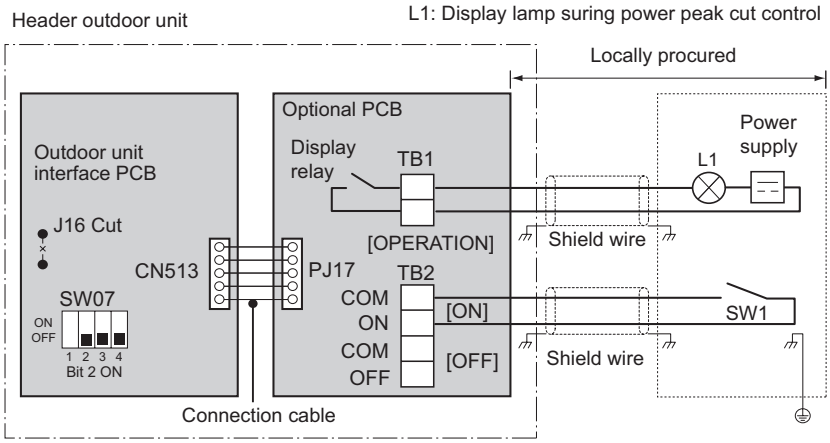

<SW07 Bit 2 OFF (two-step control)>

Power peak-cut control is enabled as long as SW1, as shown on the wiring diagram, is ON (continuously).

Jumper wire J16	Input SW1	SW07 Bit 1		Indicator relay
		Bit 1 OFF	Bit 1 ON	(L1)
Cut	ON	0% (forced stop)	60% capacity (upper limit regulated)	OFF
	OFF	100% (normal operation)	100% (normal operation)	ON

Note 1: Specifications of display relay contact

- The terminal for display output ([Operation] terminal) must satisfy the following electrical rating.

<Electrical Rating>
24 V or less (AC / DC), 10 mA or more, 1 A or less (non-conductive load)

When connecting a conductive load (e.g. relay coil) to the display relay load, insert a surge killer CR (for an AC power supply) or a diode for preventing back electromotive force (for a DC power supply) on the bypass circuit.
The optional P.C. board should be connected to the header outdoor unit (U1).

7-2-2. Power peak-cut control (extended)

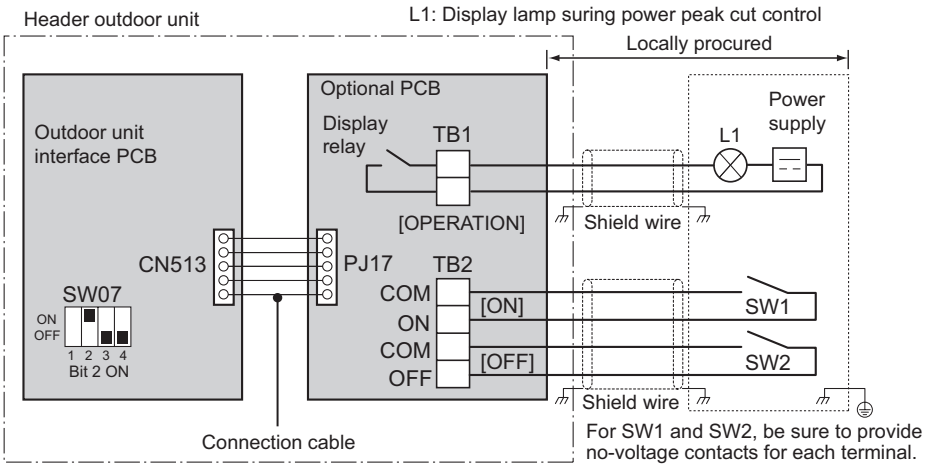

Operation

An external power peak-cut control signal limits the peak capacity of the outdoor unit.

L1: Power peak-cut control indication lamp

SW1: Power peak-cut control ON switch*1

SW2: Power peak-cut control OFF switch*1

*1 The inputs of SW1 and SW2 can be either pulse (100 msec or wider) or step signals.

* Be sure to provide a contact for each terminal.

Extended power peak-cut control settings

Specifications of display relay contact

Indication lamp	External power peak-cut control signals		Peak capacity	
			I/F SW07 Bit 1	
L1	SW1	SW2	OFF	ON
OFF	OFF	OFF	100% (normal operation)	100% (normal operation)
ON	ON	OFF	80% (upper limit regulated)	85% (upper limit regulated)
ON	OFF	ON	60% (upper limit regulated)	75% (upper limit regulated)
ON	ON	ON	0% (forced stop)	60% (upper limit regulated)

Note 1: Specifications of display relay contact

- The terminal for display output ([Operation] terminal) must satisfy the following electrical rating.

<Electrical Rating>
24 V or less (AC / DC), 10 mA or more, 1 A or less (non-conductive load)

When connecting a conductive load (e.g. relay coil) to the display relay load, insert a surge killer CR (for an AC power supply) or a diode for preventing back electromotive force (for a DC power supply) on the bypass circuit.
The optional P.C. board should be connected to the header outdoor unit (U1).

7-2-3. Snowfall fan control

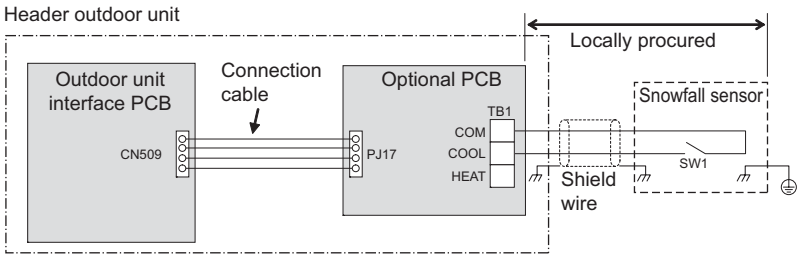

SW1: Snowfall detection switch (snowfall sensor)

Operation

An external snowfall signal turns on the outdoor unit fan.

Terminal	Input signal	Operation
COOL (SW1)	ON / OFF	Snowfall fan control (Turns on outdoor unit fan)
	ON / OFF	Normal operation (Cancels control)

The input signal is recognized during its rising/falling phase.
(After reaching the top/bottom of the rising/falling edge, the signal must remain there for at least 100 ms.)
The optional P.C. board should be connected to the header outdoor unit (U1).

7-2-4. External master ON/OFF control

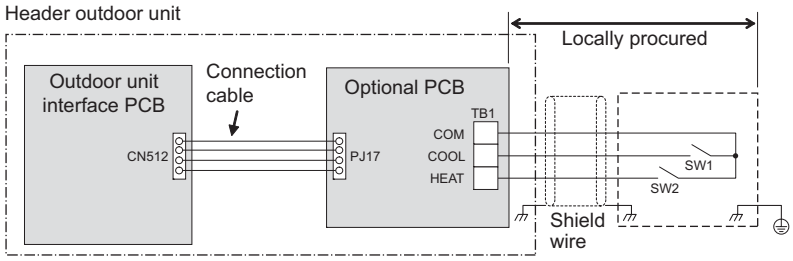

SW1: Operation input switch
SW2: Stop input switch

Operation

The system is started/stopped from the outdoor unit.

Terminal	Input signal	Operation
COOL (SW1)	ON / OFF	Turns on all indoor units
HEAT (SW2)	ON / OFF	Turns off all indoor units

The input signal is recognized during its falling phase. (After reaching the bottom of the falling edge, the signal must remain there for at least 100 ms.)

⚠ CAUTION

(1) Do not turn on the COOL (SW1) and HEAT (SW2) terminals simultaneously.
(2) Be sure to provide a contact for each terminal.
External signal: No-voltage pulse contact

The optional P.C. board should be connected to the header outdoor unit (U1).

7-2-5. Night operation (sound reduction) control

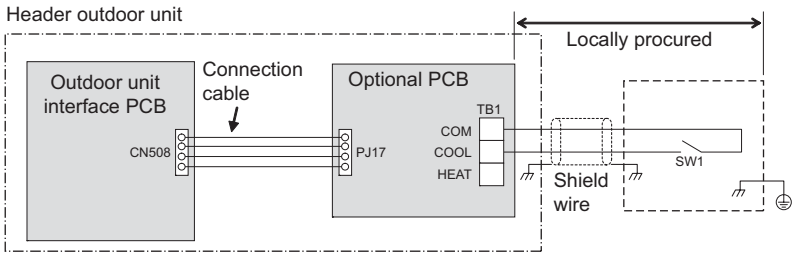

SW1: Night time signal switch

Operation

This function decreases noise at night or other times as necessary.

Terminal	Input signal	Operation
COOL (SW1)	ON / OFF	Night time control
	ON / OFF	Normal operation

The input signal is recognized during its rising/falling phase.
(After reaching the top/bottom of the rising/falling edge, the signal must remain there for at least 100 ms.)
The optional P.C. board should be connected to the header outdoor unit (U1).

The system's capacity is reduced during low-noise operation.
The table below provides a rough guide to this capacity reduction.

Outdoor unit (base unit)	During low-noise mode* dB(A)	Capacity	
		Cooling	Heating
Model 072 type	50	approx. 85%	approx. 80%
Model 096 type	53	approx. 85%	approx. 85%
Model 114 type	53	approx. 80%	approx. 80%

Relative to maximum capacity

* Position of noise measuring device: 3.3 ft (1 m) from the front face of the set and 4.9 ft (1.5 m) above ground (anechoic sound)

7-2-6. Operation mode selection control

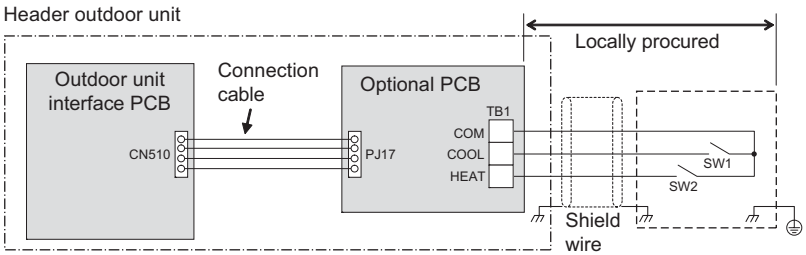

SW1: Cooling mode specified input switch
SW2: Heating mode specified input switch

NOTE

SW1: COOL mode selection switch
SW2: HEAT mode selection switch

Input signal		Operation	Remarks
COOL (SW1)	HEAT (SW2)		
ON	OFF	Only cooling operation allowed	*
OFF	ON	Only heating operation allowed	*
OFF	OFF	Normal operation	

* The display " (Operation mode selection control in progress)" appears on the remote controller

Indoor unit operation intervention function

The statuses of indoor units operating in a mode different from the selected operation mode can be changed by changing the status of a jumper wire (J01) provided on the interface P.C. board of the header outdoor unit.

<table>
<tr><th>Jumper wire</th><th>Description of intervention</th></tr>
<tr><td>J01 connected (factory default)</td><td>All indoor units operating in a mode different from the selected operation mode (prohibited-mode indoor units) become non-priority units (thermostat OFF).
Prohibited-mode indoor units
<table>
<tr><th>Operation mode</th><th>Operation status</th><th>Remote controller display</th></tr>
<tr><td>COOL</td><td>Fan operation at air flow rate set via remote controller</td><td rowspan="3">" " operation ready</td></tr>
<tr><td>HEAT</td><td>Fan operation at extremely low air flow rate</td></tr>
<tr><td>FAN</td><td>Fan operation at air flow rate set via remote controller as normal</td></tr>
</table></td></tr>
<tr><td>J01 cut</td><td>The selected operation mode is imposed on all indoor units operating in a different mode.
<table>
<tr><th>Mode selected at P.C. board</th><th colspan="2">Remote controller operation / display</th></tr>
<tr><td>Normal</td><td>All modes (COOL, DRY, HEAT and FAN) available</td><td></td></tr>
<tr><td>COOL</td><td>Only COOL, DRY and FAN available</td><td rowspan="2">" operation mode control" (turned on during remote controller operation)</td></tr>
<tr><td>HEAT</td><td>Only HEAT and FAN available</td></tr>
</table></td></tr>
</table>

The optional P.C. board should be connected to the header outdoor unit (U1).

7-2-7. Error/operation output

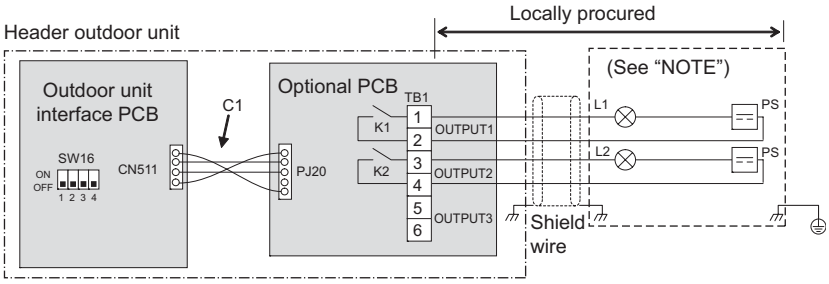

Operation

In-operation output: An in-operation indication signal is output as long as at least one indoor unit is in operation in the line.

Error output: An error indication signal is output if an error occurs in at least one indoor/outdoor unit in the line.

Note 1: Output Relay (K1, K2, K3) Contact Specifications

- Output terminals (OUTPUT1, 2, 3) must satisfy the following electrical rating.
- When connecting a conductive load (e.g. relay coil) to loads K1, K2 and K3, insert a surge killer CR (for an AC power supply) or a diode for preventing back electromotive force (for a DC power supply) on the bypass circuit.

<Electrical Rating>
24 V or less (AC / DC), 10 mA or more, 1 A or less (non-conductive load)

C1	Connector cable 1
CN511	Connector on Interface side (green)
K1,K2	Relays
L1	Error indication Lamp
L2	Operation indication Lamp
OUTPUT1	Error output
OUTPUT2	Operation output
PJ20	Connector on optional PCB side
TB1	Terminal block

The optional P.C. board should be connected to the header outdoor unit (U1).

7-2-8. Compressor operation output

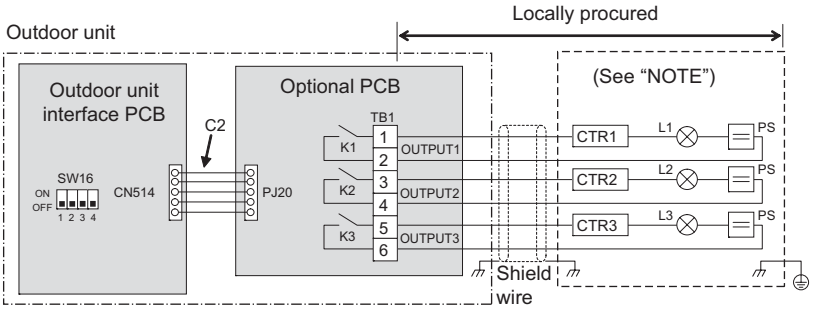

Operation

When a compressor is in operation, a relay connected to the output terminal assigned to it is turned on (closed). When it is at rest, the relay is turned off (open).

The output terminals are named OUTPUT1, OUTPUT2 and OUTPUT3 from left to right when facing the front of the outdoor unit, as shown in the diagram.

Note 1: Output Relay (K1, K2, K3) Contact Specifications

- Output terminals (OUTPUT1, 2, 3) must satisfy the following electrical rating.
- When connecting a conductive load (e.g. relay coil) to loads K1, K2 and K3, insert a surge killer CR (for an AC power supply) or a diode for preventing back electromotive force (for a DC power supply) on the bypass circuit.

<Electrical Rating>
24 V or less (AC / DC), 10 mA or more, 1 A or less (non-conductive load)

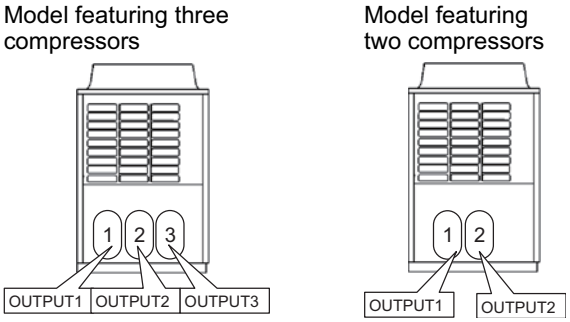

C2	Connection cable 2
CN514	Interface-side connector (green)
CTR1	Elapsed operation counter 1
CTR2	Elapsed operation counter 2
CTR3	Elapsed operation counter 3
K1,K2,K3	Relay
L1,L2,L3	Operation indication lamp
OUTPUT1	Compressor 1 in-operation output terminal
OUTPUT2	Compressor 2 in-operation output terminal
OUTPUT3	Compressor 3 in-operation output terminal
PJ20	Optional P.C. board-side connector
PS	Power supply unit
TB1	Terminal block

7-2-9. Operating rate output

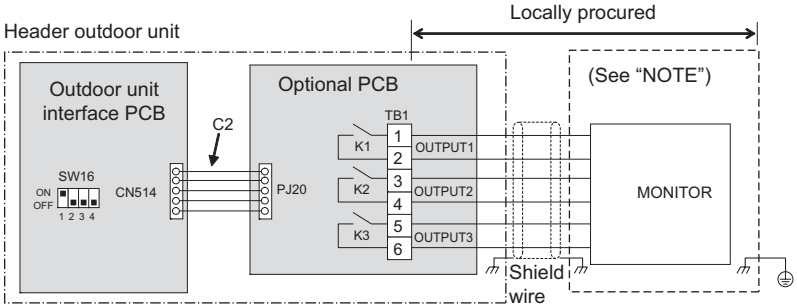

Operation

At the output terminals, a signal is present (relay closed) or absent (relay open) in various combinations according to the system operation factor, as shown in the diagram.

The operation rate (FA) is the percentage ratio of the current output of the system to the maximum output (100%).

Function	SW16	OUTPUT1	OUTPUT2	OUTPUT3	Operation factor (FA)
System operation rate output	ON OFF 1 2 3 4 Bit 1: ON Bit 2: OFF	off	off	off	FA=0%
		on	off	off	0%<FA<20%
		off	on	off	20%≦FA<35%
		on	on	off	35%≦FA<50%
		off	off	on	50%≦FA<65%
		on	off	on	65%≦FA<80%
		off	on	on	80%≦FA<95%
		on	on	on	95%≦FA

off = Relay open
on = Relay closed

C2	Connection cable 2
CN514	Interface-side connector (green)
MONITOR	Monitoring device
OUTPUT1	Output terminal for each function
OUTPUT2	Output terminal for each function
OUTPUT3	Output terminal for each function
PJ20	Connector on optional PCB side
TB1	Terminal block

* Connect the optional P.C. board to the header outdoor unit.

Note 1: Output Relay (K1, K2, K3) Contact Specifications

- Output terminals (OUTPUT1, 2, 3) must satisfy the following electrical rating.
- When connecting a conductive load (e.g. relay coil) to loads K1, K2 and K3, insert a surge killer CR (for an AC power supply) or a diode for preventing back electromotive force (for a DC power supply) on the bypass circuit.

<Electrical Rating>
24 V or less (AC / DC), 10 mA or more, 1 A or less (non-conductive load)

8 Test Operation

8-1. Procedure and summary of test operation

A test operation is executed with the following procedure. When problems or an error occurs at any step, remove the causes of the problem or error referring to “9 Troubleshooting.”

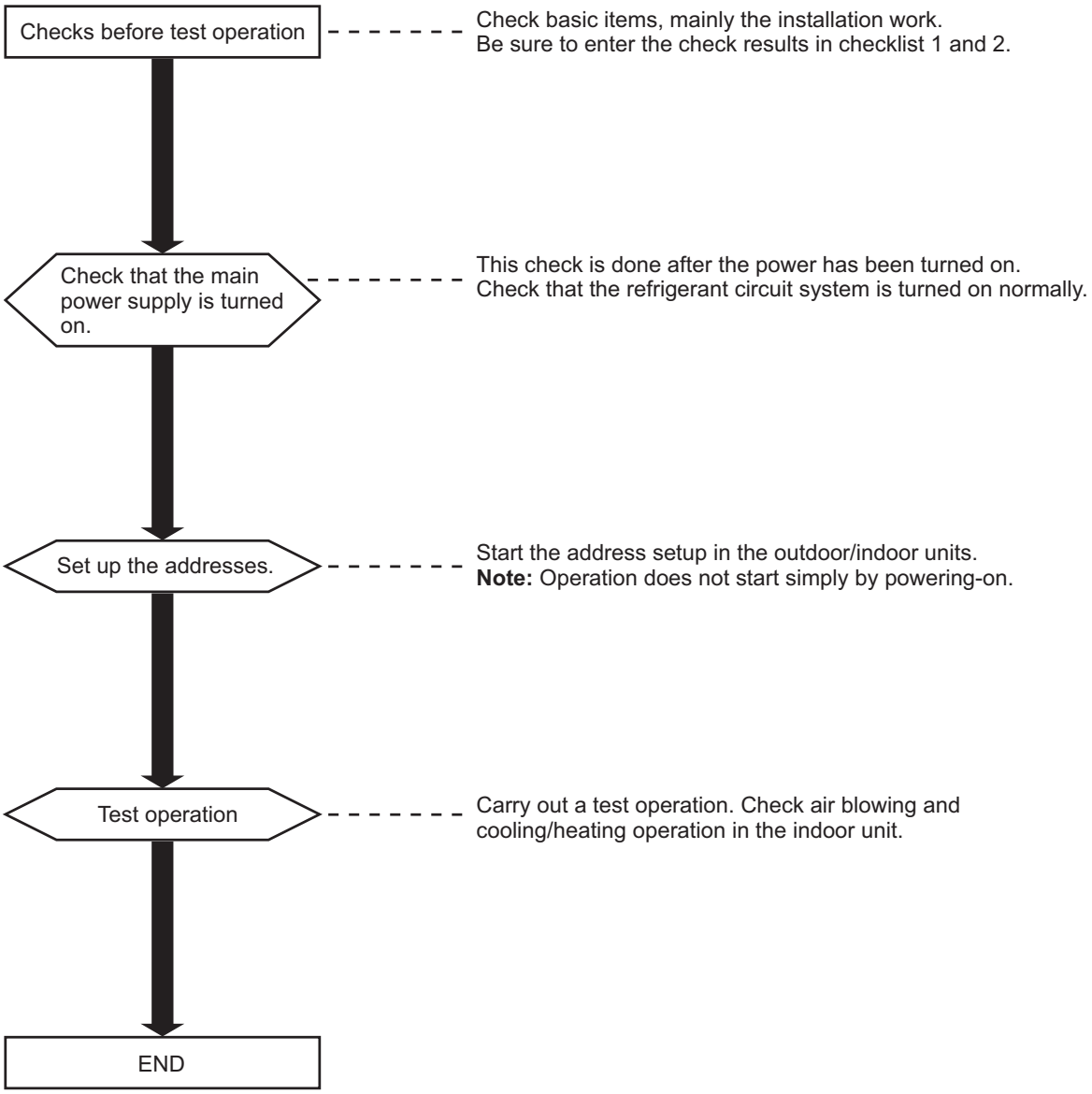

8-2. Check items before test operation (before powering-on)

Prior to the test operation, check the following items to verify there are no problems with the installation work.

(1) In the case that a central control system is not connected:

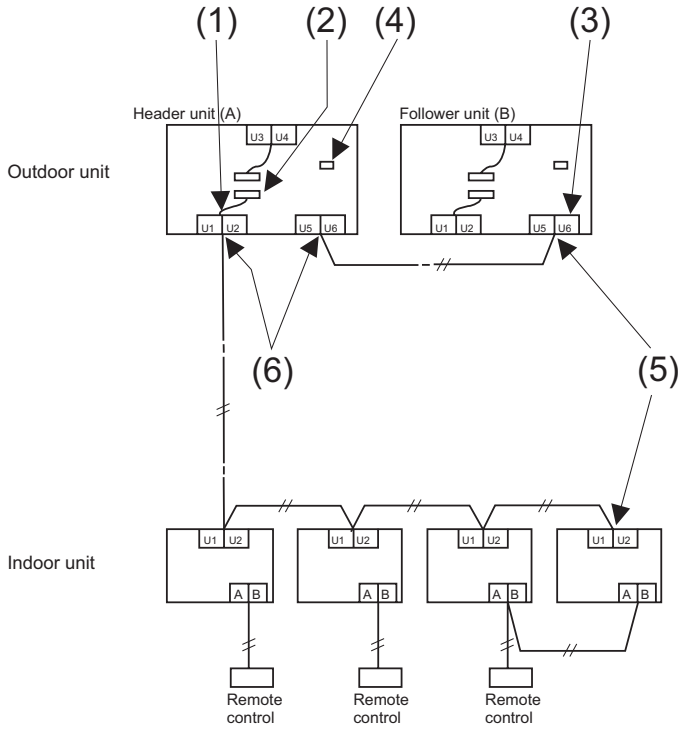

Main check items	Check
(1) Are the indoor and outdoor communication lines of the header unit connected to the U1/U2 terminals?	
(2) Is the relay connector between the U1/U2 terminal and the U3/U4 terminal removed? (Set up at shipment from the factory)	
(3) Is the communication line between outdoor units connected to the U5/U6 terminal?	
(4) Is the terminal resistance (SW30-bit 2) on the interface PC board of the header unit turned on? (Set up at shipment from the factory)	
(5) Is the end terminal of the shield wire open?	
(6) Is the end terminal of the shield wire earthed at the header unit side?	

NOTE

The figure above does not show all the electric wires.
For details, refer to the installation manuals for the outdoor unit, indoor unit, remote control, or optional devices.

(2) In the case that a central control system is connected (before address setup)

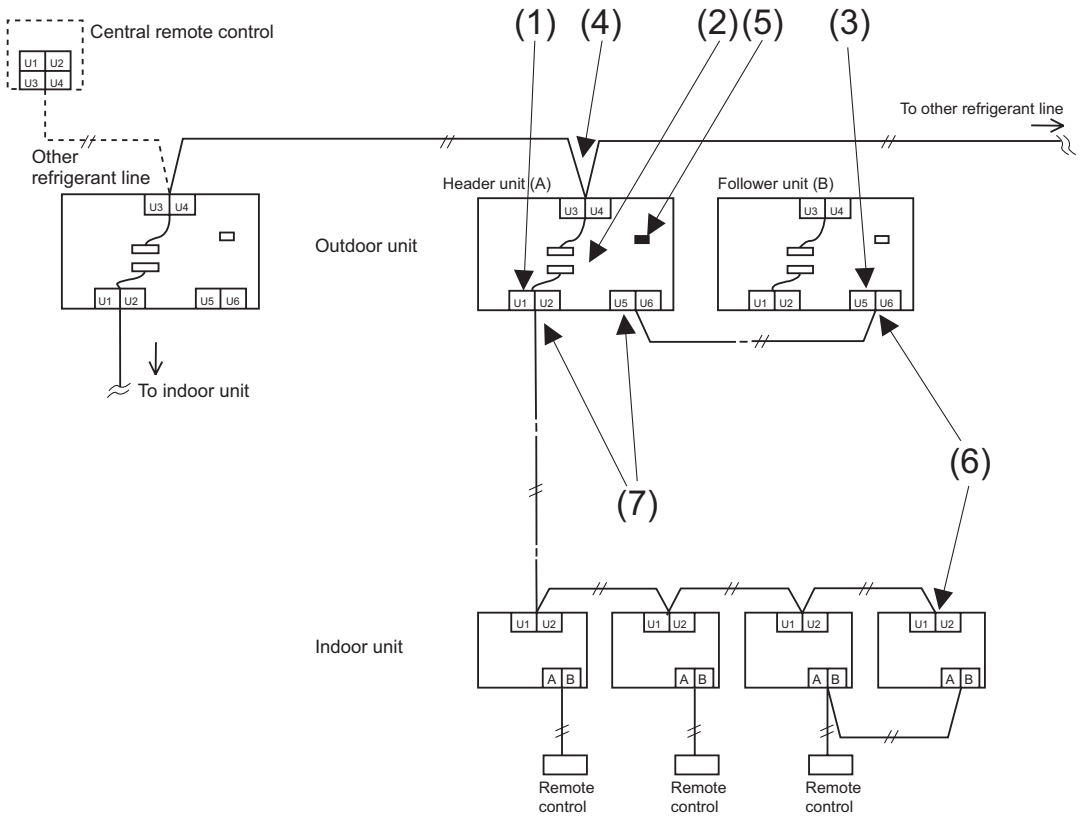

Main check items	Check
(1) Are the indoor and outdoor communication lines of the header unit connected to the U1/U2 terminals?	
(2) Is the relay connector between the U1/U2 terminal and the U3/U4 terminal removed? (Set up at shipment from the factory) (Keep the relay connector disconnected before address setup.)	
(3) Is the communication line between outdoor units connected to the U5/U6 terminal?	
(4) Is the communication line of the central control system connected to the header unit U3/U4 terminals of each refrigerant line? (The communication line of the central control system may be connected to the communication lines of the indoor/outdoor communication lines.)	
(5) Is the terminal resistance (SW30-bit 2) on the interface PC board of the header unit turned on? (Set up at shipment from the factory) * After address setup and test operation check, turn on the SW30-bit 2 of the header unit for the smallest line address, and turn off SW30-bit 2 of the header unit for other refrigerant lines. (See “8-4-3. Address setup procedure”)	
(6) Is the end terminal of the shield wire open?	
(7) Is the end terminal of the shield wire earthed at the header unit side?	
(8) When the refrigerant line and the central control system of the SDI series are connected: → Are “1:1 model” Connection Interface (TCB-PCNT31TLUL) correctly connected? → When the SDI series operates with group, twin, or triple operation, are the interfaces connected to the header unit of the indoor unit?	

NOTE

The figure above does not show all the electric wires.
For details, refer to the installation manuals for the outdoor unit, indoor unit, remote control, or optional devices.

Checklist 1

- Using Checklist 1, check that there are no problems with the installation work.

Is the capacity of the circuit breaker (Earth leakage breaker) appropriate?	Outdoor total capacity	☐ A	Header unit (A)	☐ A	Indoor unit	☐ A
			Follower unit (B)	☐ A		
Is the gauge of the power cable correct?			Header unit (A) AWG	☐	Indoor unit AWG	☐
			Follower unit (B) AWG	☐		
Is the control communication line correct?			Indoor-outdoor connection terminals (U1, U2)	☐		
			Outdoor-outdoor connection terminals (U5, U6)	☐		
			Central control system connection terminals (U3, U4)	☐		
Is the power of indoor units supplied collectively?						
Is it grounded to earth?						
Is the resistance sufficient? (10 MΩ or higher)				☐ MΩ or higher		
Is the main power voltage sufficient? (within 208/230 V ±10%)				☐ V		
Is the diameter of connecting pipe correct?						
Is the branch kit correct?						
Is the water drain of the indoor unit arranged so that it flows without accumulation?						
Is the heat insulation of pipes sufficient? (connecting pipes, branch kit)						
Is there no short circuit of discharge air in the indoor / outdoor units?						
After an airtightness test of the pipes, are vacuuming and adding of refrigerant executed?						
Are the valves of all the outdoor units fully opened?				Gas side	Liquid side	Balance side
			Header unit (A)	☐	☐	☐
			Follower unit (B)	☐	☐	☐

Checklist 2

Calculate the additional amount of refrigerant from the additional amount of refrigerant (A) by the pipe diameter on the liquid side, the pipe length to be connected, and the corrective amount of refrigerant (C) according to system horsepower.

Additional refrigerant charge amount (lb) = $\underbrace{\text{Actual length of liquid pipe} \times \text{Additional refrigerant charge amount per liquid pipe 1ft}}_{(A)}$ + $\underbrace{\text{Adjustment amount of refrigerant according to system capacity}}_{(B)}$

First, enter the total length for each liquid pipe diameter in the following table, and then calculate the additional amount of refrigerant by pipe length.

<(A) : Additional amount of refrigerant by pipe length>

Pipe diameter on the liquid side	Additional refrigerant amount / 1ft (lb)	Total pipe length on each liquid side (ft)	Additional amount of refrigerant pipe diameter on each liquid side (lb)
Ø1/4”	0.017	×	=
Ø3/8”	0.037	×	=
Ø1/2”	0.071	×	=
Ø5/8”	0.108	×	=
Ø3/4”	0.168	×	=
	Additional amount of refrigerant by pipe length		total

Next, refer to the following table for the Adjustment amount of refrigerant according to system capacity (B).

<(B) : Adjustment amount of refrigerant according to system capacity>

Outdoor unit capacity type	Adjustment amount of refrigerant (lb)	Combined outdoor units	
072 type	3.31	072 type	–
096 type	13.23	096 type	–
114 type	15.43	114 type	–
144 type	0.00	072 type	072 type
168 type	16.53	096 type	072 type
192 type	27.56	096 type	096 type
228 type	27.56	114 type	114 type

Lastly, add the additional amount of refrigerant by pipe length (A) to the Adjustment amount of refrigerant according to system capacity(B). This is the final additional amount of refrigerant.

<Additional amount of refrigerant>

(A) : Additional amount of refrigerant by pipe length	(lb)	
(B) : Adjustment amount of refrigerant according to system capacity	(lb)	
(A) + (B) : Additional amount of refrigerant	(lb)	

8-3. Check at main power-on

After turning on the main power of the indoor units and outdoor unit in the refrigerant line to conduct a test operation, check the following items in each outdoor and indoor unit.
(After turning on the main power, be sure to check in order: indoor unit → outdoor unit.)

<Check on the outdoor unit>

(1) Check that all the rotary switches, SW01, SW02, and SW03, on the interface PC board of the header unit are set to “1.”

(2) If another check code is displayed on the 7-segment display [B], remove the cause of the problem referring to Section, “9 Troubleshooting”.

(3) Check that “L08” is displayed on the 7-segment display [B] on the interface PC board of the header unit. (L08: Indoor address not set up)
(If the address setup operation has already been completed during servicing, etc., the above check code is not displayed, and only “U1” is displayed on the 7-segment display [A].)

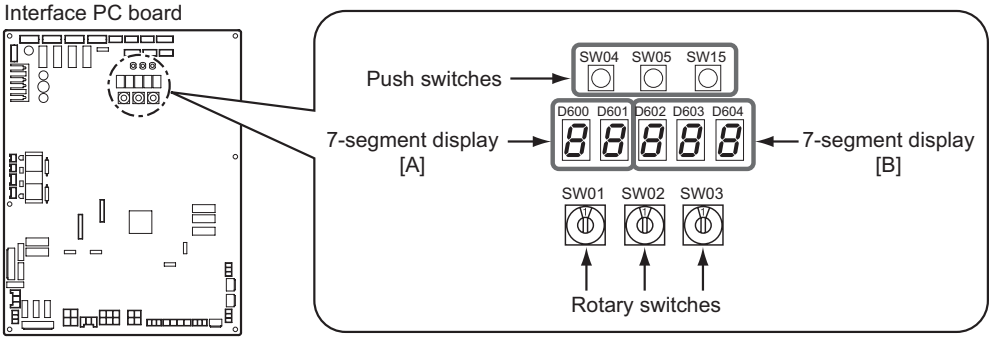

<Check on the indoor unit>

(1) Display check on the remote controller (in the case of a wired remote control)
Check that a frame, as shown in the following figure at left, is displayed on the LC display section of the remote controller.

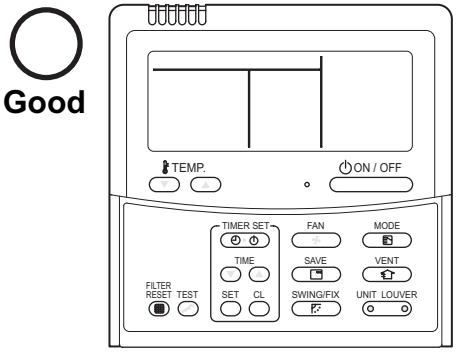

Normal status
(power supplied and operation stopped)

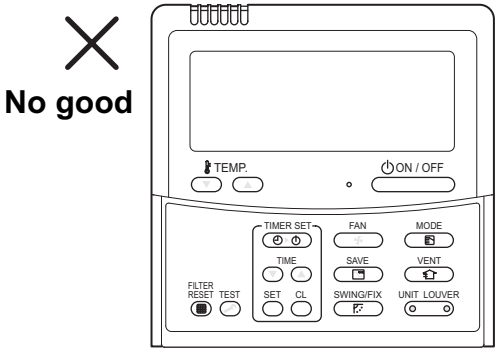

When power is not supplied normally

If no frame is displayed, as shown in the above figure at right, the remote control does not have a normal supply of power; check the following items.

- Check the power supply of the indoor unit.
- Check the cabling between the indoor unit and the remote control.
- Check whether there is a cutoff of wire around the indoor control PC board or not, and check for connection failures of the connectors.
- Check for failure of the transformer for the indoor electrical control box.
- Check for failure of the indoor control PC board.

8-4. Address setup

This product requires address setup before operation.
Follow this procedure for address setup.

8-4-1. Precautions

(1) Address setup is not performed simply by turning on the power supply.
(2) For indoor units, address setup can be done either by manual address setup or by automatic address setup:
Automatic address setup: Setup from SW15 on the interface PC board of the header unit
Manual address setup: Setup from the wired remote controller. (For details, refer to “8-4-3. Address setup procedure.”)
(3) Automatic setup usually takes about 5 minutes per line. In some cases, however, it may take up to 10 minutes.
(4) It is unnecessary to operate the air conditioner to achieve address setup.

8-4-2. Address setup and check procedure

<table>
<tr><th>Procedure</th><th>Item</th><th>Operation and check contents</th></tr>
<tr><td>1</td><td>Indoor unit power-on</td><td>Turn on the power of the indoor unit for the refrigerant line for which the address is to be set up.</td></tr>
<tr><td>2</td><td>Outdoor unit power-on</td><td>Turn on the power of all the outdoor units for the refrigerant line for which the address is to be set up.</td></tr>
<tr><td>3</td><td>7-segment display check</td><td>Check that “L08” is displayed on the 7-segment display [B] on the interface PC board of the header unit in the system where the address is to be set up.</td></tr>
<tr><td>4</td><td>Address setup start</td><td>Confirm the items in “8-4-3. Address setup procedure,” and then set up the address according to the operation procedure.
(Be careful to note that the setup operation may differ in group control and central control systems.)
Note:
The address cannot be set up if switches are not operated.</td></tr>
<tr><td>5</td><td>Display check after setup</td><td>• After address setup, “U1” “ ” is displayed on the 7-segment display.
• For follower outdoor units, “U2” to “U4” are displayed on the 7-segment display [A].
• If an error code is displayed on the 7-segment display [B], remove the cause of the problem referring to “9 Troubleshooting.”</td></tr>
<tr><td>6</td><td>System information check after setup</td><td>Using the 7-segment display function, check the system information of the scheduled system. (This check is executed on the interface PC board of the header unit.)
<table>
<tr><th></th><th colspan="3">Rotary switch setup</th><th colspan="2">7-segment display</th></tr>
<tr><th></th><th>SW01</th><th>SW02</th><th>SW03</th><th>[A]</th><th>[B]</th></tr>
<tr><td>System capacity *1</td><td>1</td><td>2</td><td>3</td><td>[Nominal tons]</td><td>[ton]</td></tr>
<tr><td>Number of connected outdoor units</td><td>1</td><td>3</td><td>3</td><td>[Number of units]</td><td>[P]</td></tr>
<tr><td>Number of connected indoor units</td><td>1</td><td>4</td><td>3</td><td>[Number of connected units]</td><td></td></tr>
</table>
After the above checks, return rotary switches SW01, SW02, and SW03 to 1/1/1.</td></tr>
</table>

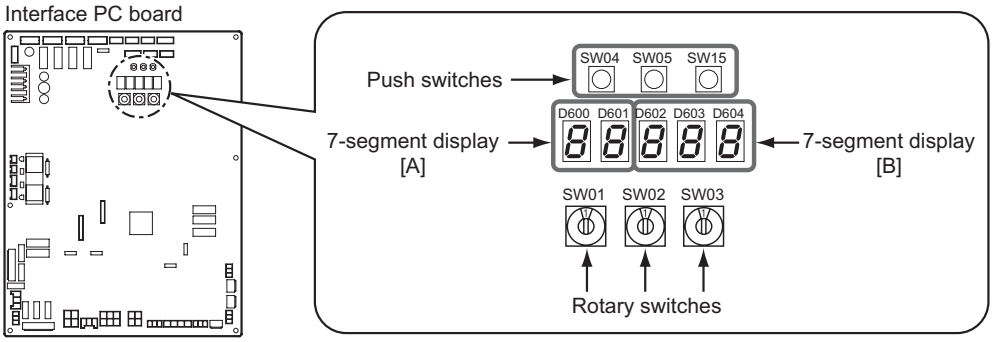

*1

Outdoor Unit capacity type	Nominal tons
072 type	6
096 type	8
114 type	10
144 type	12
168 type	14
192 type	16
228 type	20

8-4-3. Address setup procedure

Without central control or with central control of 1 refrigerant lines (Example 1) : use Address setting procedure 1
With central control of 2 refrigerant lines (Example 2) : use Address setting procedure 2

	Example 1	Example 2
	When a single refrigerant line is centrally cintrolled	When 2 or more refrigerant lines are centrally controlled
Address setting procedure	See procedure 1	See procedure 2
Control wiring diagram	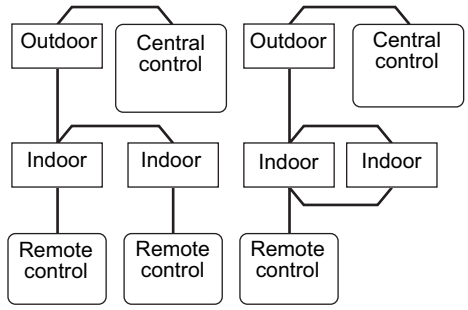	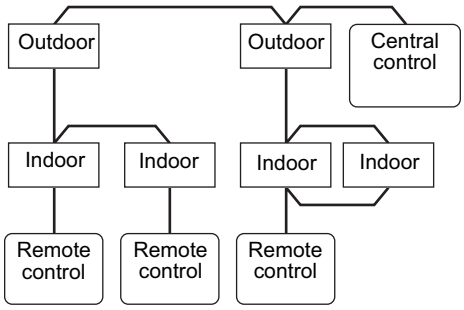

◆Address setting procedure 1

1 **Turn on indoor units first, and then turn on outdoor units.**

2 **About one minute after turning the power on, confirm that the 7-segment display on the interface P.C. board of the header outdoor unit indicates U. 1. L08 (U. 1. flash).**

3 **Press SW 15 to start the automatic address setting.**
(It may take up to 10 minutes (normally about 5 minutes) to complete one line's setting.)

4 **The 7-segment display indicates Auto 1 → Auto 2 → Auto 3.**
After the indication, U. 1. - - - (U. 1. flash) starts flashing on the display.
When the flashing stops and U. 1. - - - (U. 1. light) remain lit on the display, the setting is complete.

Interface P.C. board on the header outdoor unit

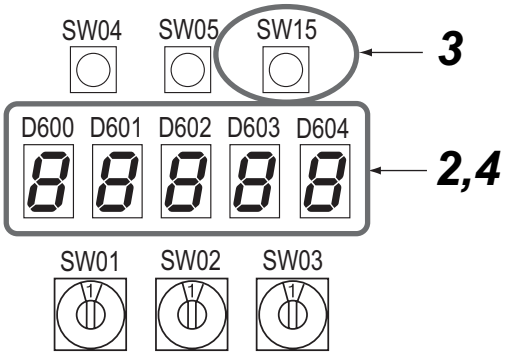

REQUIREMENT

- When 2 or more refrigerant lines are controlled as a group, be sure to turn on all the indoor units in the group before setting addresses.
- If you set the unit addresses of each line separately, each line's header indoor unit is set separately. In that case, the CODE No. "L03" (Indoor header unit overlap) is indicated as running starts. Change the group address to make one unit the header unit using wired remote controller.

(Example)	Controlling 2 or more refrigerant lines as a group
System wiring diagram	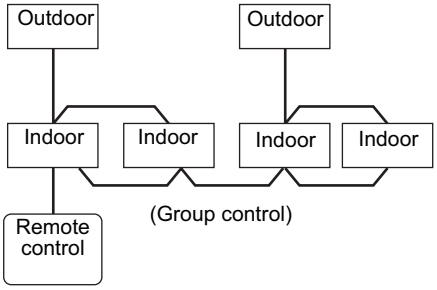

◆Address setting procedure 2

1 Set a system address for each system using SW 13 and 14 on the interface P.C. board on the header outdoor unit of each system.
(Factory default: Address 1)

NOTE

Be sure to set a unique address on each system. Do not use a same address as another system (refrigerant line) or a custom side.

Interface P.C. board on the header outdoor unit

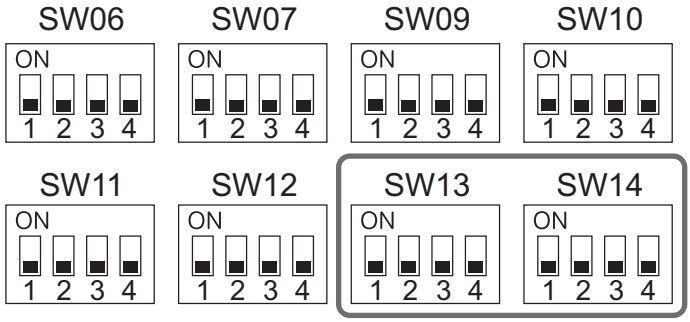

Line address switches on the outdoor interface PC board (○: switch on, ×: switch off)

Line address	SW13				SW14			
	1	2	3	4	1	2	3	4
1				×	×	×	×	×
2				×	○	×	×	×
3				×	×	○	×	×
4				×	○	○	×	×
5				×	×	×	○	×
6				×	○	×	○	×
7				×	×	○	○	×
8				×	○	○	○	×
9				×	×	×	×	○
10				×	○	×	×	○
11				×	×	○	×	○
12				×	○	○	×	○
13				×	×	×	○	○
14				×	○	×	○	○

Line address	SW13				SW14			
	1	2	3	4	1	2	3	4
15				×	×	○	○	○
16				×	○	○	○	○
17				○	×	×	×	×
18				○	○	×	×	×
19				○	×	○	×	×
20				○	○	○	×	×
21				○	×	×	○	×
22				○	○	×	○	×
23				○	×	○	○	×
24				○	○	○	○	×
25				○	×	×	×	○
26				○	○	×	×	○
27				○	×	○	×	○
28				○	○	○	×	○

Not used for setup of line address (do not change setup.)

2 **Be sure to disconnect the relay connectors between the [U1U2] and [U3U4] terminals on all the header outdoor units that will be connected to the central control. (Factory default: disconnected)**

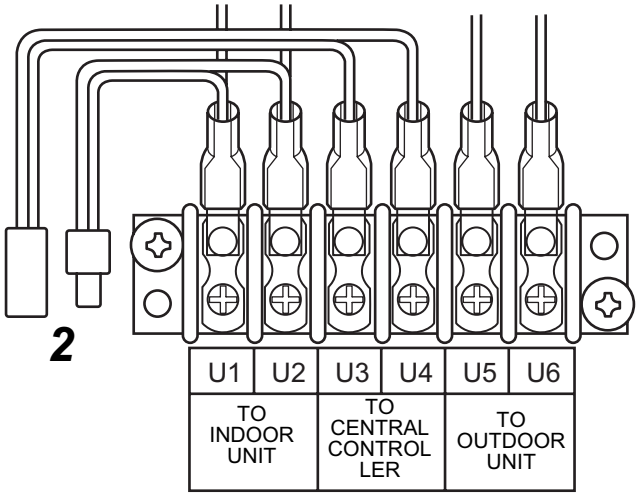

3 **Turn on indoor units first, and then turn on outdoor units.**

4 **About 1 minute after turning the power on, confirm that the 7-segment display on the interface P.C. board of the header outdoor unit indicates U. 1. L08 (U. 1. flash).**

5 **Press SW 15 to start the automatic address setting.**
(It may take up to 10 minutes (normally about 5 minutes) to complete one line's setting.)

6 **The 7-segment display indicates Auto 1 → Auto 2 → Auto 3.**
After the indication, U. 1. - - - (U. 1. flash) starts flashing on the display.
When the flashing stops and U. 1. - - - (U. 1. light), remains lit on the display, the setting is complete.

7 **Repeat steps *4* to *6* for other refrigerant lines.**

8 **After completing address setting of all systems, turn off dip switch 2 of SW30 on the interface P.C. boards of all the header outdoor units connected to the same central control, except the unit that has the lowest address.**
(For unifying the termination of the wiring for the central control of indoor and outdoor units)

9 **Connect the relay connectors between the [U1, U2] and [U3, U4] terminals of the header outdoor unit of each refrigerant line.**

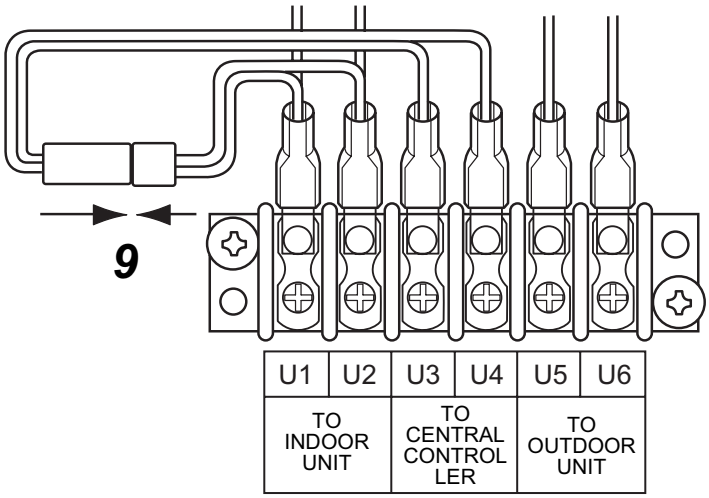

10 Set the central control address.

(For the setting of the central control address, refer to the installation manuals of the central control devices.)

Header unit interface P.C. board

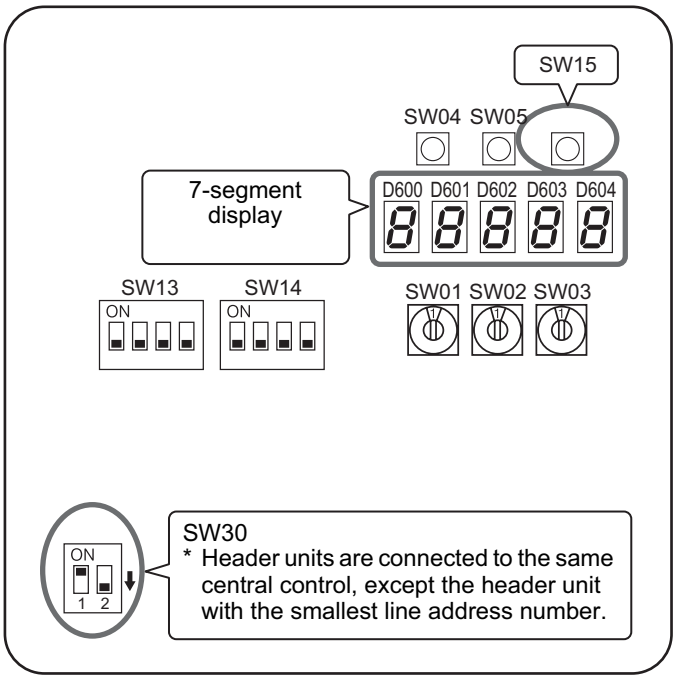

Switch setting (setting example when controlling 2 or more refrigerant lines centrally)

Outdoor units (setting manually)

*The items in bold font must be set manually.

Outdoor unit's interface P.C. board	Header unit	Follower unit	Header unit	Follower unit	Header unit	Factory default
SW13, 14 (Line (system) address)	1	(No setting required)	2	(No setting required)	3	1
Dip switch 2 of SW30 (Terminator of indoor/ outdoor communication line and central control line)	ON	(No setting required)	**Set to OFF after setting addresses.**	(No setting required)	**Set to OFF after setting addresses.**	ON
Relay connector	**Connect after setting addresses.**	Open	**Connect after setting addresses.**	Open	**Connect after setting addresses.**	Open

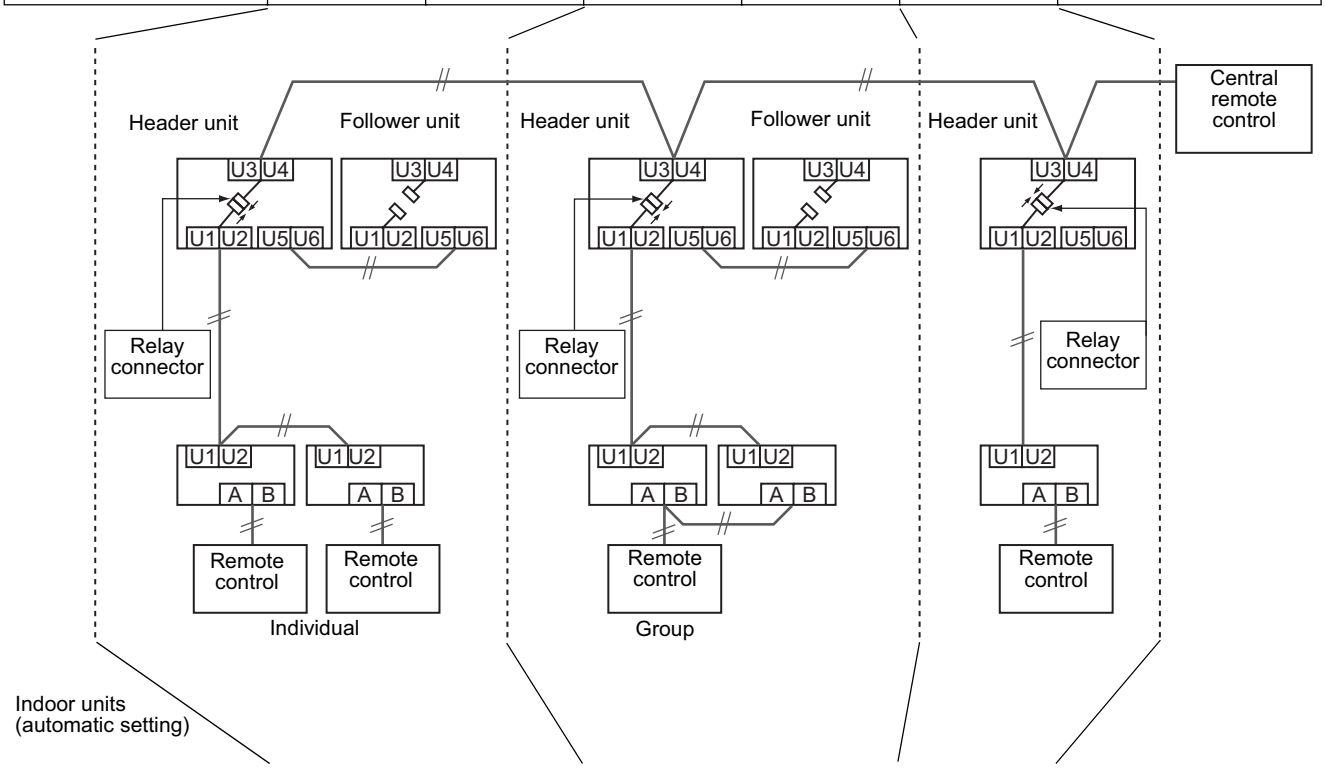

Line (system) address	1	1	2	2	3
Indoor unit address	1	2	1	2	1
Group address	0	0	1	2	0

⚠ CAUTION

Relay connector connection

Never connect relay connectors between the [U1, U2] and [U3, U4] terminals before completing address setting of all the refrigerant lines. Otherwise, the addresses cannot be set correctly.

Manual address setup from the remote control

With indoor wiring work completed and outdoor wiring work not done—in cases where indoor unit addresses are decided in advance from the wired remote control, or in cases where addresses are change after address setup.

(Wiring example for 2 refrigerant lines)

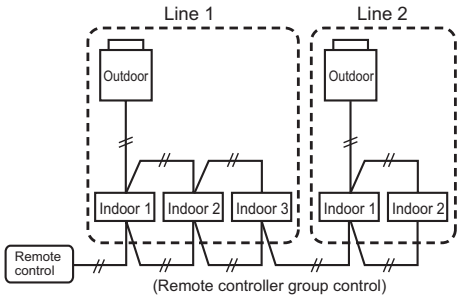

Line address	1	1	1	2	2
Indoor address	1	2	3	1	2
Group address	1 Header	2 Follower	2 Follower	2 Follower	2 Follower

In the above example, where remote controls are not yet wired, set the address manually after individually connecting the wired remote control.

(Wiring during manual address setup)

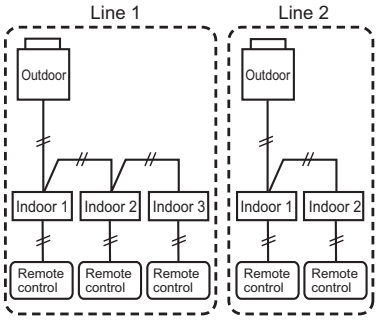

After address setup, return to the original wiring over remote controls.

Group address

Individual: 0000
Header unit: 0001
Follower unit: 0002
} In cases of remote control group control

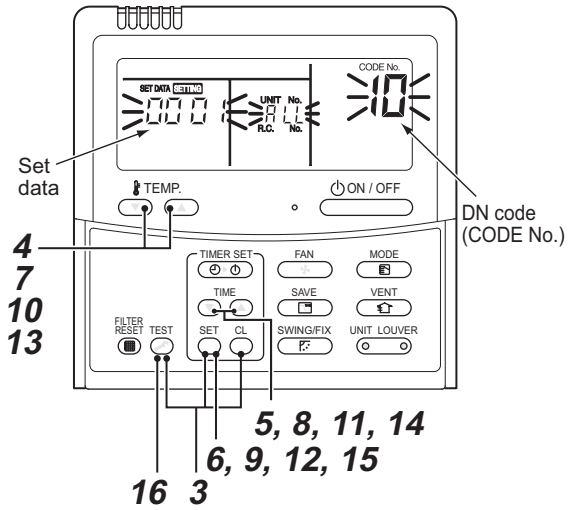

1 **Arrange one indoor unit and one remote control set to 1 by 1.**

2 **Turn on the power.**

3 **Push the SET + CL + TEST buttons simultaneously for 4 seconds or more.**
LCD begins blinking.

▼ (Refrigerant line address)

4 **Using the TEMP. buttons, set the DN code to 12.**

5 **Using the TIME buttons, set up the line address (match it with the line address on the interface PC board of the header unit on the same refrigerant line).**

6 **Push the SET button (OK when the display goes on).**

▼ (Indoor address)

7 **Using the TEMP. buttons, set the DN code to 13.**

8 **Using the TIME buttons, set up the indoor address. (0001~0048)**

9 **Push the SET button (OK when the display goes on).**

▼ (Group address)

10 **Using the TEMP. buttons, set the DN code to 14.**

11 **Using the TIME buttons, set Individual = 0000, Header unit = 0001, Follower unit = 0002.**

12 **Push the SET button (OK when the display goes on).**

▼ (Central control address)

13 **Using the TEMP. buttons, set DN code to 03.**

14 **Using the TIME buttons, set up the central control address. (0001~0064)**

15 **Push SET button. (OK when display goes on).**

16 **Push the TEST button.**
Setup is finished (“Setting up” blinks; when “Setting up” goes off, operation is possible).

17 **Return to the original wiring over remote controls.**

NOTE

(1) When setting the line address from the remote control, do not use addresses 29 and 30.
Addresses 29 and 30 cannot be set up on the outdoor unit. If they are incorrectly used, the code “E04” (indoor/outdoor communication circuit error) is output.

(2) When manual address setup has been done from a remote control, and central control over refrigerant lines is to be done, setup the header unit of each line as follows:
- Using SW13 and SW14 on the interface PC board of the header unit of each line, setup the line address for each line.
- Except for the line with the smallest line address number, set SW03-bit 2 to “off” for the interface PC board of the header unit of lines connected to the same central control (put the resistance of the end terminals of the central control line, indoors and outdoors, into one).
- Connect the relay connector between U1/U2 and U3/U4 of the header unit for each refrigerant line.
- After that, set up the central control address. (For central control address setup, refer to the installation manual of the central control devices.)

■ Confirming the indoor unit addresses and the position of an indoor unit using the remote control

◆ Confirming the numbers and positions of indoor units

To see the indoor unit address of an indoor unit which you know the position of

▼ When the unit is individual (the indoor unit is paired with a wired remote control one-to-one), or it is a group-controlled one.

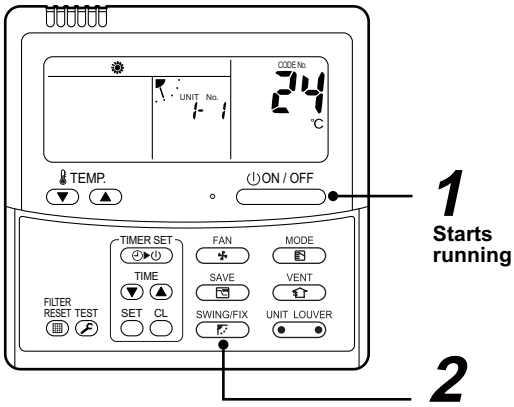

(Execute it while the units are running.)

1 **Push the ON / OFF button if the units stop.**

2 **Push the UNIT LOUVER button (left side of the button).**
A unit numbers 1-1 is indicated on the LCD (it will disappear after a few seconds). The indicated number shows the system address and indoor unit address of the unit.
When 2 or more indoor units are connected to the remote control (group-controlled units), a number of other connected units appears each time you push the UNIT LOUVER button (left side of the button).

To find an indoor unit's position from its address

▼ When checking unit numbers controlled as a group

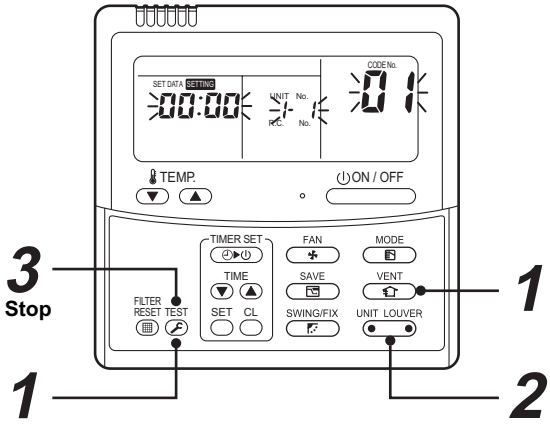

(Execute it while the units are stopped.)
The indoor unit numbers in a group are indicated one after another. The fan and louvers of the indicated units are activated.

1 Push and hold the VENT and TEST buttons at the same time for more than 4 seconds.
- ALL appears on UNIT No. on the LCD display.
- The fans and louvers of all the indoor units in the group are activated.

2 Push the UNIT LOUVER button (left side of the button). Each time you push the button, the indoor unit numbers are indicated one after another.
- The first-indicated unit number is the address of the header unit.
- Only the fan and louvers of the indicated indoor unit are activated.

3 Push the TEST button to finish the procedure.
All the indoor units in the group stop.

▼ To check all the indoor unit addresses using an arbitrary wired remote control. (When communication wirings of 2 or more refrigerant lines are interconnected for central control)

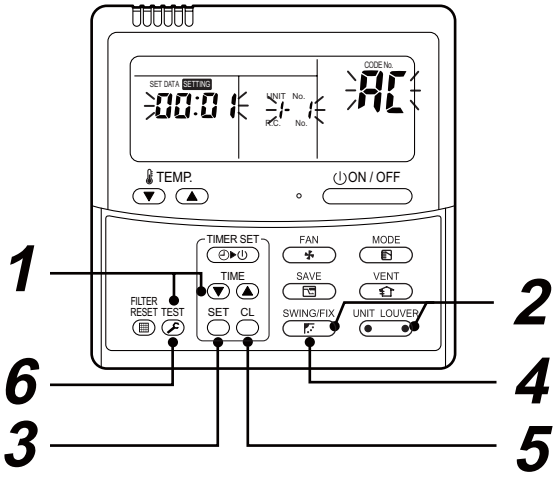

(Execute it while the units are stopped.)
You can check indoor unit addresses and positions of the indoor units in a single refrigerant line.
When an outdoor unit is selected, the indoor unit numbers of the refrigerant line of the selected unit are indicated one after another and the fan and louvers of the indicated indoor units are activated.

1 **Push and hold the TIME ▼ and TEST buttons at the same time for more than 4 seconds.**
At first, the line 1 and CODE No. AC (Address Change) are indicated on the LCD display. (Select an outdoor unit.)

2 **Push the UNIT LOUVER (left side of the button) and SWING/FIX buttons repeatedly to select a system address.**

3 **Push the SET button to confirm the system address selection.**
- The address of an indoor unit connected to the selected refrigerant line is indicated on the LCD display and its fan and louvers are activated.

4 **Push the UNIT LOUVER button (left side of the button). Each time you push the button, the indoor unit numbers of the selected refrigerant line are indicated one after another.**
- Only the fan and louvers of the indicated indoor unit are activated.

◆To select another system address

5 **Push the CL button to return to step *2*.**
- After returning to step ***2***, select another system address and check the indoor unit addresses of the line.

6 **Push the TEST button to finish the procedure.**

■Changing the indoor unit address using a remote control

To change an indoor unit address using a wired remote control.

▼The method to change the address of an individual indoor unit (the indoor unit is paired with a wired remote control one-to-one), or an indoor unit in a group.
(The method is available when the addresses have already been set automatically.)

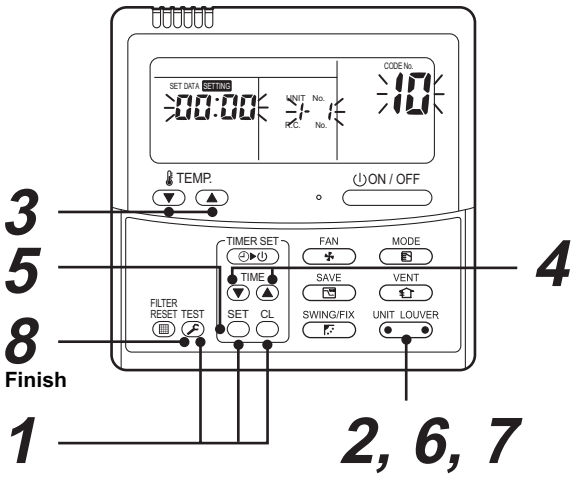

(Execute it while the units are stopped.)

1 **Push and hold the SET, CL, and TEST buttons at the same time for more than 4 seconds.**
(If 2 or more indoor units are controlled in a group, the first indicated UNIT No. is that of the head unit.)

2 **Push the UNIT LOUVER button (left side of the button) repeatedly to select an indoor unit number to change if 2 or more units are controlled in a group. (The fan and louvers of the selected indoor unit are activated.)**
(The fan of the selected indoor unit is turned on.)

3 **Push the TEMP. ▼ / ▲ buttons repeatedly to select 13 for CODE No..**

4 **Push the TIME ▼ / ▲ buttons repeatedly to change the value indicated in the SET DATA section to that you want.**

5 **Push the SET button.**

6 **Push the UNIT LOUVER button (left side of the button) repeatedly to select another indoor UNIT No. to change.**
Repeat steps ***4*** to ***6*** to change the indoor unit addresses so as to make each of them unique.

7 **Push the UNIT LOUVER button (left side of the button) to check the changed addresses.**

8 **If the addresses have been changed correctly, push the TEST button to finish the procedure.**

▼To change all the indoor unit addresses using an arbitrary wired remote control.
(The method is available when the addresses have already been set automatically.)

(When communication wirings of 2 or more refrigerant lines are interconnected for central control)

NOTE

You can change the addresses of indoor units in each refrigerant line using an arbitrary wired remote control.

* Enter the address check/change mode and change the addresses.

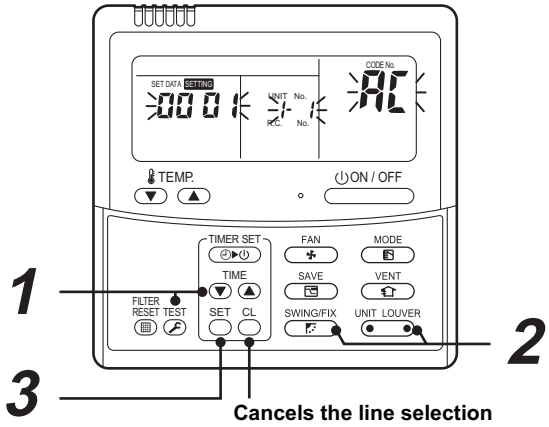

If no number appears on UNIT No., no outdoor unit exists on the line. Push CL button and select another line following step ***2***.

(Execute it while the units are stopped.)

1 **Push and hold the TIME ▼ and TEST buttons at the same time for more than 4 seconds.**
At first, the line 1 and CODE No. AC (Address Change) are indicated on the LCD display.

2 **Push UNIT LOUVER (left side of the button) and SWING/FIX buttons repeatedly to select a system address.**

3 **Push the SET button.**

- The address of one of the indoor units connected to the selected refrigerant line is indicated on the LCD display and the fan and louvers of the unit are activated.
  At first, the current indoor unit address is displayed in SET DATA.
  (No system address is indicated.)

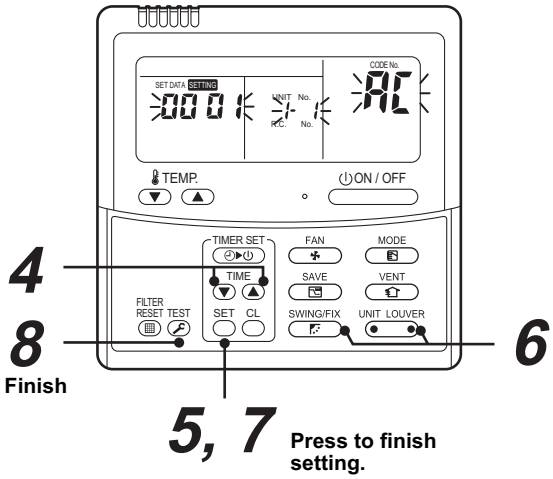

4 **Push the TIME ▼ / ▲ buttons repeatedly to change the value of the indoor unit address in SET DATA.**
Change the value in SET DATA to that of a new address.

5 **Push the SET button to confirm the new address on SET DATA.**

6 **Push the UNIT LOUVER button (left side of the button) repeatedly to select another address to change. Each time you push the button, the indoor unit numbers in a refrigerant line are indicated one after another. Only the fan and louvers of the selected indoor unit are activated.**
Repeat steps ***4*** to ***6*** to change the indoor unit addresses so as to make each of them unique.

7 **Push the SET button.**
(All the segments on the LCD display light up.)

8 **Push the TEST button to finish the procedure.**

■ Resetting the address (Resetting to the factory default (address undecided))

Method 1

Clearing each address separately using a wired remote control.
Set the system address, indoor unit address and group address to “0099” using a wired remote control.
(For the setting procedure, refer to the address setting procedures using the wired remote control on the previous pages.)

Method 2

Clearing all the indoor unit addresses on a refrigerate line at once from the outdoor unit.

1 **Turn off the refrigerant line to reset to the factory default and set the header outdoor unit of the line as below.**

1) Disconnect the relay connectors between the [U1, U2] and [U3, U4] terminals.
   (Leave them as they are if they have already been disconnected.)

2) Turn on dip switch 2 of SW30 on the interface P.C. board of the header outdoor unit if the switch is OFF. (Leave it as it is if it has already been set to ON.)

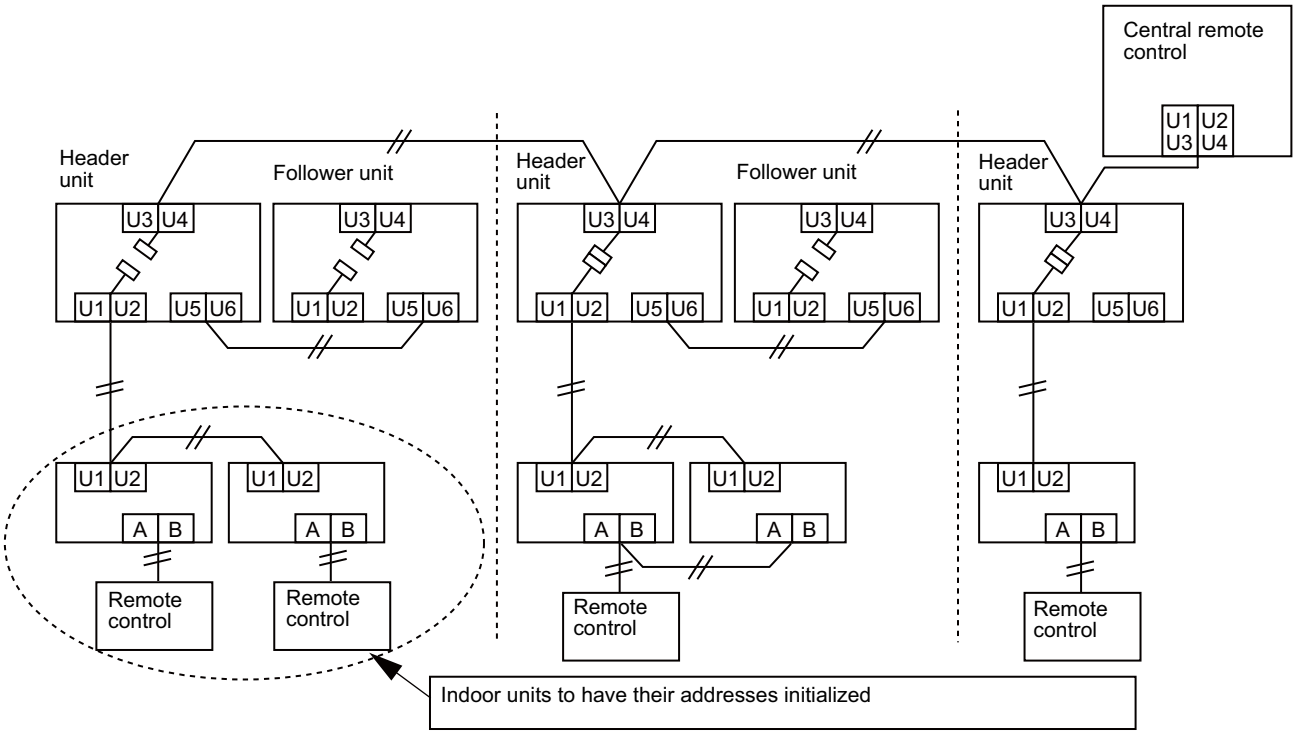

2 Turn on the indoor and outdoor units of the refrigerant line for which you want to initialize the addresses. About one minute after turning on the power, confirm that the 7-segment display on the header outdoor unit indicates "U.1. - - -" and operate the interface P.C. board on the header outdoor unit of the refrigerant line as follows.

SW01	SW02	SW03	SW04	Clearable addresses
2	1	2	Confirm that the 7-segment display indicates "A.d.buS" and turn SW04 ON for more than five seconds.	System/indoor unit/group address
2	2	2	Confirm that the 7-segment display indicates "A.d.nEt" and turn SW04 ON for more than five seconds.	Central control address

3 Confirm that the 7-segment display indicates "A.d. c.L." and set SW01, SW02 and SW03 to 1, 1, 1 respectively.

4 After a time "U.1.L08" appears on the 7-segment display if the address clearing has been completed successfully.
If the 7-segment display indicates "A.d. n.G.", the outdoor unit may still connected with other refrigerant lines. Check the connection of the relay connectors between [U1, U2] and [U3, U4].

NOTE

Take care to carry out the procedure above correctly; otherwise, addresses in other refrigerate lines may also be cleared.

5 Set the addresses again after finishing the clearance.

■ In the case of an increase in address-undefined indoor units (extension, etc.)

To set up the indoor address of a unit with an address that is undefined due to the extension of indoor units or replacement of PC board, etc., follow the methods below.

Method 1

Set up an address individually from a wired remote control.
(Line address, Indoor address, Group address, Central address)
For the setup method, refer to “Manual address setup from the remote control.” above.

Method 2

Set up an address from the outdoor unit.

* Leave the addresses of the units for which addresses have already been set up as they are. Set up an address only for the unit where the address is undefined.
Addresses are allocated from lower numbers.

Setup procedure

Set up the outdoor header units in the refrigerant line to which indoor units have been added, as follows.

1 **Remove the relay connector between U1/U2 and U3/U4.**

2 **If it is off, turn on SW30-bit 2 on the interface PC board at outdoor header unit side.**
*Turn off the power, and then execute the operation.

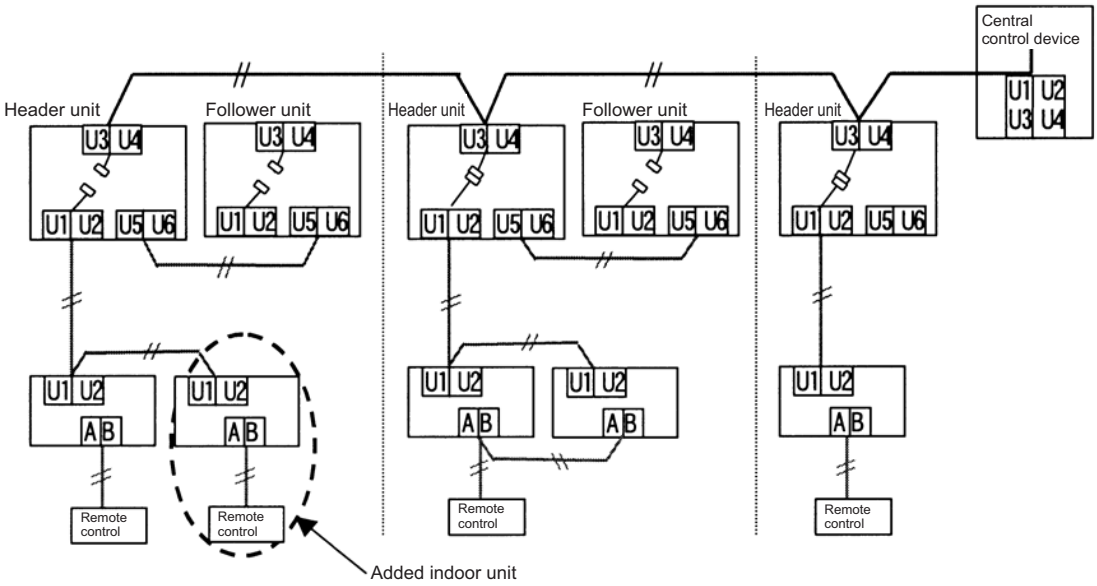

3 **Turn on the indoor/outdoor power for the refrigerant line for which an address is to be set up. After approximately 1 minute, check that “U.1. - - -” is displayed on the 7-segment display.**

4 **Execute the following operation on the interface PC board of the header unit.**

SW01	SW02	SW03	SW04
2	14	2	After checking that “In.At” is displayed on the 7-segment display, push SW04 for 5 seconds or more.

“AUTO1” → “AUTO2” → “AUTO3” → ... → “AUTO9” ... is counted and displayed on the 7-segment display.

5 **When “U.1. - - -” is displayed on the 7-segment display, the setup operation finished.**
Turn off the indoor/outdoor power.

6 **Return to the following setup as before.**

- Relay connector
- SW30-bit 2
- SW01, SW02, SW03

8-4-4. Check after address setup when central control system is connected

When the central control system is connected, check that the following setup has finished after address setup.

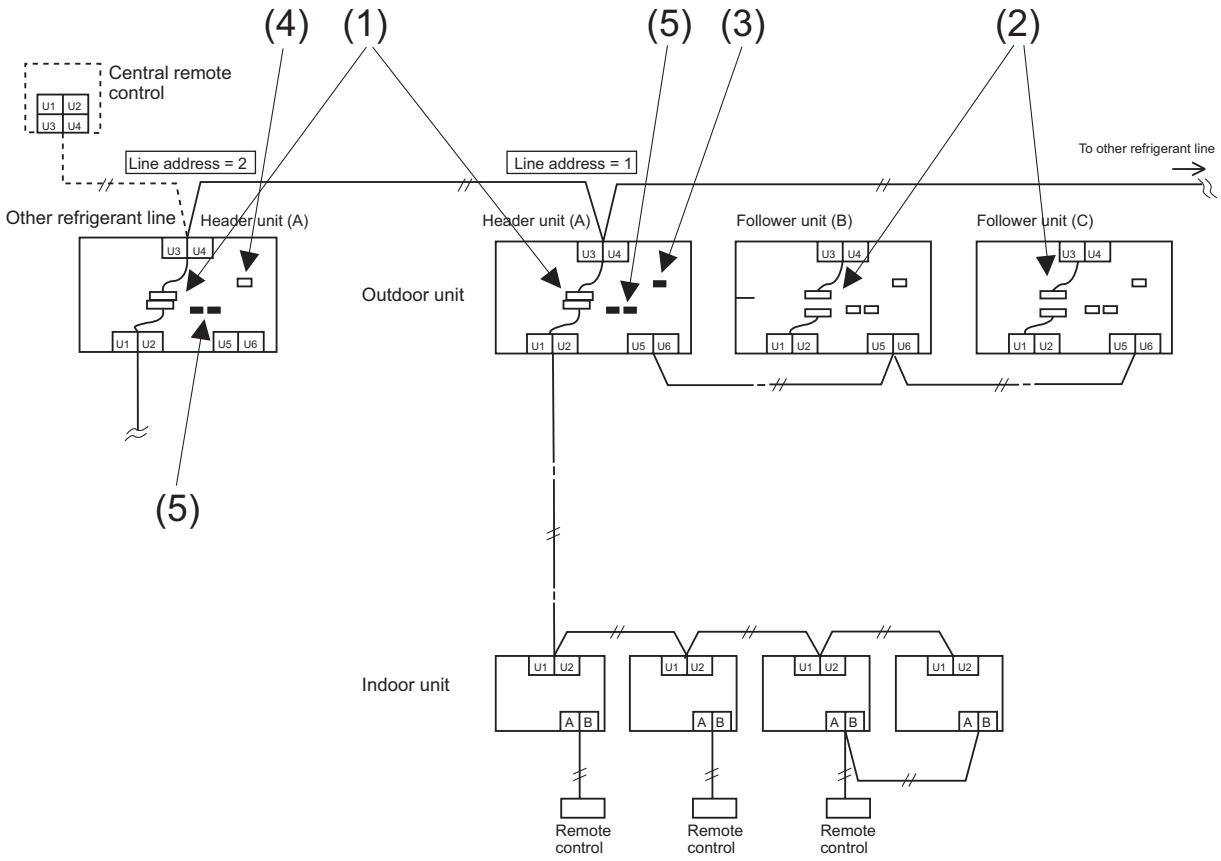

	Main check items	Check
Relay connector	(1) Is the relay connector of the header unit connected after address setup?	
	(2) Is the relay connector of the follower unit removed?	
Terminal resistance	(3) Is the end resistance (SW30-bit 2) of the header unit with the smallest line address number in the central control turned on? (Setup is unnecessary for follower units.)	
	(4) Is the terminal resistance (SW30-bit 2) of the header units, except for the line with the smallest central control line address, turned off? (Setup is unnecessary for follower units.)	
Line address	(5) Are addresses in the line address (SW13, SW14) not duplicated in each refrigerant line?	

NOTE

The figure above does not show all the electric wires.
For details, refer to the installation manuals for the outdoor unit, indoor unit, remote control, or optional devices.

8-5. Troubleshooting in test operation

If there are phenomena such as the output of a check code or the remote control is not accepted when powered-on after wiring work or during address setup operation, the following causes are considered.

8-5-1. A check code is displayed on the remote control

Check the code displayed on the indoor remote control	Header unit 7-segment display	Cause	Countermeasures
E04	–	When outdoor power is off	Check that the header outdoor unit power is on
	L08	Address setup error • Only line addresses of the connected indoor units are undefined. • The outdoor line address and the line addresses of all the indoor units do not match. • The indoor addresses are duplicated. (Units except those displaying E04 are duplicated.) • A header unit is not set up in group control (except groups displaying E04).	Set up the address again.
	E08 ⇔ -XX Alternate blinking	Duplication of indoor addresses (address number in the subcode of the check code are duplicated).	Set up the address again.
	E07	There is no outdoor terminal resistance, or there are two or more resistances. (After address setup, when terminal resistance setup is changed after powering-on)	Check SW30 bit 2 of the header unit. No connection between multiple refrigerant lines: SW30 bit 2 is on. Connection between multiple refrigerant lines: SW30 bit 2 of the connected header unit is turned on only for one line.
		Transmission circuit error at the interface side (PC board failure)	Replace the interface PC board.
	E06	After address setup, communication from all the indoor units is interrupted under the condition that a normal operation can be performed.	Check and correct disconnection of the indoor/outdoor communication line (the communication line between the header unit and the leading indoor unit). Check for the influence of communication noise.
E16	E16 ⇔ -XX Alternate blinking	Exceeded the number or capacity of connected indoor units	Adjust the number or capacity of connected indoor units.
E23	E23	Communication between outdoor units has stopped.	Check the number of connected outdoor units. Check that outdoor unit power is on.
E25	E25	Duplication of outdoor addresses (only when an outdoor address was manually set up)	Do not use manual setup for outdoor addresses.
E26	E26 ⇔ -XX Alternate blinking	Number of connected outdoor units has decreased. • When installing an outdoor backup • The power of a follower unit is not turned on.	Correction of the cause of error occurrence • If it occurs when installing a backup, clear the error after setup finishes. • If the power of a follower unit is not turned on, turn on the power.
L04	L04	Duplication of outdoor line addresses • Line address setup error (occurred after connection between U1/U2 and U3/U4 connectors)	Modify the line address setup of the header unit between lines. (Set up SW13 and SW14 on the interface PC board.)
L05(*)	L06	Duplication of indoor units with priority	Set up priority only for one indoor unit.
L06(*)		There are two or more indoor units set up with priority.	Among indoor units indicating “L05,” set one unit with priority.
L08	L08	Address setup error • Only indoor addresses of all the connected indoor units are undefined.	Set up the addresses again. Modify the setup.

* “L05”: Displayed on the indoor unit set up with priority
“L06”: Displayed on the indoor units except the one set up with priority

8-5-2. Operation from the indoor remote control is not accepted, and a check code is displayed on the 7-segment display of the interface PC board of the header unit.

Indoor remote control status	Header unit 7-segment display	Cause	Countermeasures
No response	L08	Line addresses and indoor addresses of all the connected indoor units are not set.	Set up addresses.
		There is no header unit of group control.	Set up a group address.
	E19 ⇔ -00 Alternate blinking	Indoor unit power is not turned on.	Turn on the power again. (In the order: indoor → outdoor)
		Indoor/outdoor communication line is not correctly connected to the U1/U2 terminal of the header unit (Fig. 1). (Indoor/ outdoor cannot communicate before address setup.)	Correct wiring
		There is no of outdoor terminal resistance, or there are two or more resistances (before address setup).	Check SW30 bit 2 of the header unit. No connection between multiple refrigerant lines: SW30 bit 2 is on. Connection between multiple refrigerant lines: SW30 bit 2 of the connected header unit is turned on only for one line.
	E19 ⇔ -02 Alternate blinking	When connecting an indoor/outdoor communication line between outdoor units under the condition of a connected communication line between outdoor units (Fig. 2).	Correct wiring
		SW08 setup error	Turn all SW08 switches to “off.”
	E20 ⇔ -01 Alternate blinking	Address setup is performed with connecting an indoor/ outdoor communication line between outdoor units (Fig. 3).	Correct wiring
		Address setup is performed under the condition of connecting multiple refrigerant lines (Fig. 3).	Correct wiring

8-5-3. There is no display of a check code on the 7-segment display on the interface PC board of the header unit, although there is indoor unit that is not accepting operation from the indoor remote control.

Indoor remote control status	Header unit 7-segment display	Cause	Countermeasures
No response	None	The communication line is not connected between indoor and outdoor (the unit that does not respond to the indoor remote control).	Modify the wiring.
		Line address and indoor address are not set (the unit that does not respond to the indoor remote control).	Set up the address.
		The power of the header unit of the group is not turned on in indoor group control (the unit that does not respond to the indoor remote control).	Turn on the power.
		Group address is set to the follower unit for individual control (the unit that does not respond to the indoor remote control).	Set the group address to “0” in the case of individual control.
No display on the indoor remote control (no line is output.)	None	The power is not turned on (the unit that is not displayed on the indoor remote control).	Turn on the power.
		The indoor remote control is not connected with a wire (the unit that is not displayed on the indoor remote control).	Modify the wiring.
		Miswiring of the indoor remote control (the unit that is not displayed on the indoor remote control)	Modify the wiring.
		Indoor remote control communication circuit error (the unit that is not displayed on the indoor remote control) If 208/230 V is incorrectly applied to the indoor remote control terminal, the remote control communication circuit fails.	Remove the fast-on terminal connected to indoor remote control terminals A/B, and check the voltage. If voltage is not applied (normally 15 to 18 V), replace the PC board.

8-5-4. In checking the number of connected outdoor units and connected indoor units after address setup, a lower number of connected units is displayed. (There are outdoor/indoor units that do not operate in a test operation.)

Status	Cause	Countermeasures
The number of connected outdoor units is too few.	Miswiring of communication lines between outdoor units or an unconnected wire (Fig. 4). (Address setup operation finished without recognizing a miswired follower unit.)	After modification of wiring, set up the addresses again and check the number of connected outdoor units.
The number of connected indoor units is too few.	Miswiring of communication lines between indoor units or an unconnected wire (Fig. 5). (Address setup operation finished without recognizing a miswired indoor unit.)	After modification of wiring, set up the addresses again and check the number of connected indoor units.
The number of outdoor units connected to a group is too few in group operation from an indoor remote control.	The indoor remote control is not connected with wire. Miswiring of the indoor remote control	Using the main indoor remote control connected to a group, start a test operation, specify the unit that is not operating (the unit not connected to the group), and then check the wiring.
	Indoor remote control communication circuit error If 208/230 V is incorrectly applied to the remote control terminal, the remote control communication circuit fails.	Using the main indoor remote control connected to a group, start a test operation and then specify the unit that is not operating (the unit not connected to the group). Remove the fast-on terminal connected to remote control terminals A/B, and check the voltage. If voltage is not applied (normally 15 to18 V), replace the PC board.

Miswiring example

Figure	Remote control status	Header unit 7-segment display	Miswiring example
Fig. 1	No response	E19-00	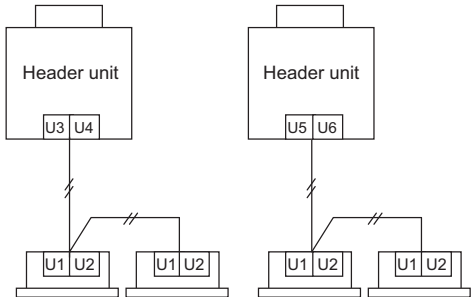
Fig. 2	No response	E19-02	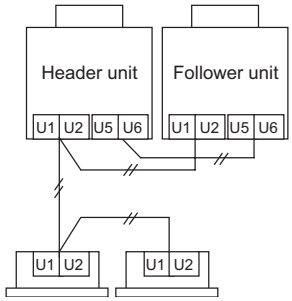
Fig. 3	No response	E20-01	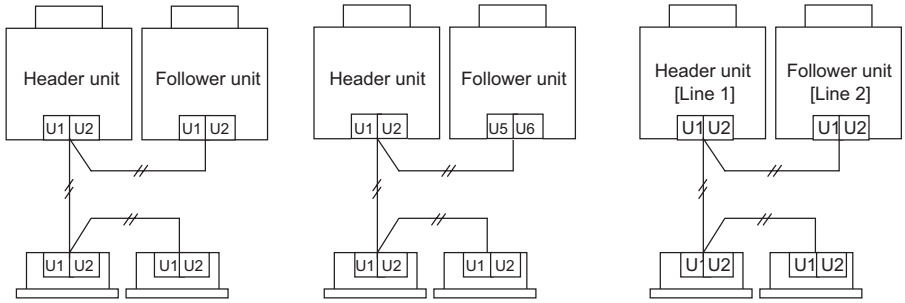

Figure	Status	Miswiring example
Fig. 4	The number of connected outdoor units is too few.	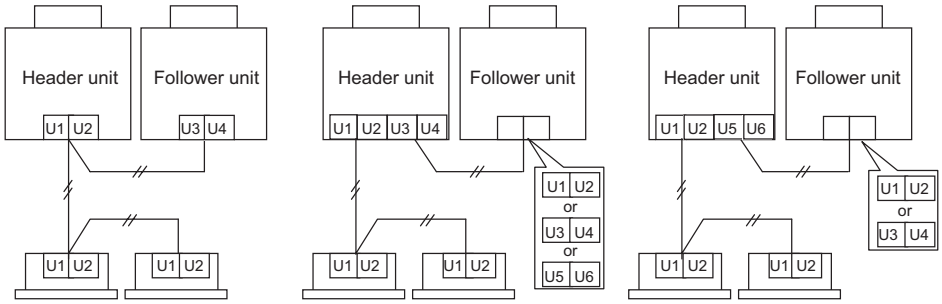
Fig. 5	The number of connected indoor units is too few.	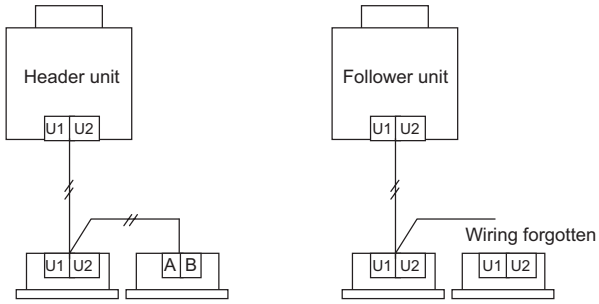

8-6. Test operation check

8-6-1. Fan check

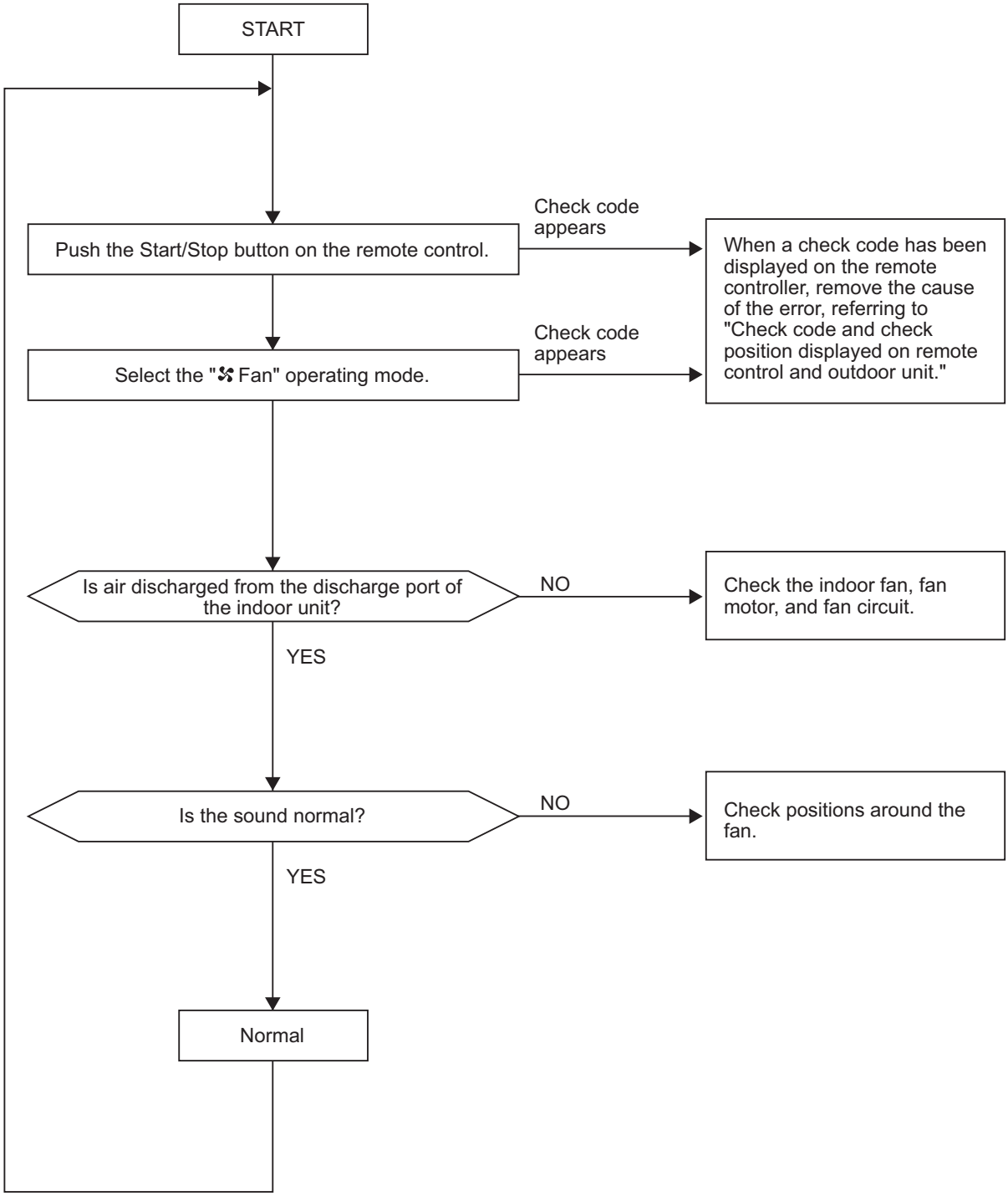

Check every indoor unit in turn.

8-6-2. Cooling/heating test operation check

The cooling/heating test operation check can be performed on both the indoor remote control and the outdoor header unit interface PC board.

(1) Test operation start/stop operation

Test operation from the indoor remote control

- Wired remote control: Refer to the items below in “Test operation” of the wired remote control.
- Wireless remote control: Refer to the items below in “Test operation” of the wireless remote control.

▼ Wired remote control

Procedure	Operation content
1	When the Test button is pushed for 4 seconds or more, “TEST” is displayed in the display section, and the unit enters test operating mode. 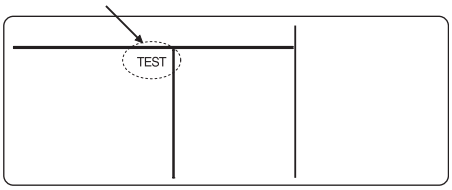
2	Push the ON / OFF button.
3	Using the Select Mode button, select the “❄ COOL” or “☀ HEAT” operating mode. • Do not use an operating mode other than “❄ COOL” or “☀ HEAT”. • Temperature adjustment is unavailable during test operation. • Error is detected as usual. 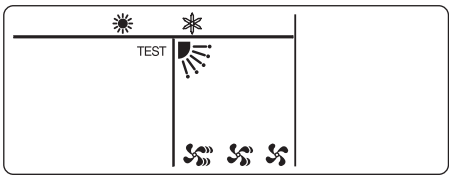
4	When the test operation has finished, push the ON / OFF button to stop the operation. (The same display as in procedure 1 appears in the display section.)
5	Push the Test button to clear the test operating mode. (“TEST” disappears from the display section, and the status returns to the normal stopped status.)

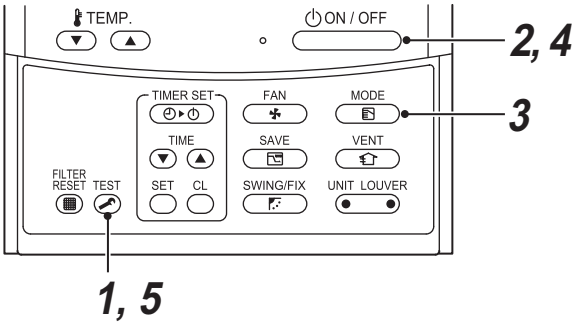

▼ Wireless remote control (Except the 4-way Cassette type and the Ceiling type)

Procedure	Operation content
1	Remove the nameplate of the receiver section by inserting a screwdriver or similar tool into the notch at the bottom of the plate, and set the DIP switch to “TEST RUN ON.”
2	Execute a test operation with the ⏻ button on the wireless remote control. • The “⏻”, “◷” and “☀” LEDs blink during test operation. • Under “TEST RUN ON” status, temperature adjustment from the wireless remote controller is invalid. Do not use this method of operation other than for test operation because the equipment will be damaged.
3	Use either the “❄ COOL” or “☀ HEAT” operation mode for a test operation. * The outdoor unit does not operate for approximately 3 minutes after powering-on or stopping operation.
4	After the test operation is finished, stop the air conditioner from the wireless remote controller, and return the DIP switch of the sensor section to its original position. (A 60-minute timer clearing function is attached to the sensor section in order to prevent continuous test operation.)

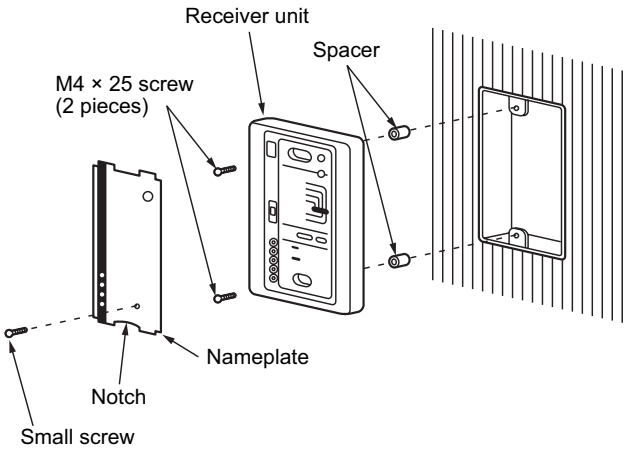

▼ Wireless remote control (4-way Cassette type)

Procedure	Operation content
1	Turn off the air conditioner's power. Remove the adjustment corner cap attached to the sensor section from the ceiling panel. For removing method, follow the installation manual attached to the ceiling panel. (Be careful when handling the sensor section because it has cables connected to it.) Remove the sensor cover from the adjustment corner cap (held with 1 screw).
2	Change Bit 1, "TEST," of switch S003 on the sensor PC board from "off" to "on." Replace the sensor cover and attach the adjustment corner cap with the sensors to the ceiling panel. Turn on the air conditioner's power.
3	Push the ⏻ button of the wireless remote control, and select the "❄ COOL" or "☀ HEAT" operating mode with the Mode button. (All display lamps on the wireless remote control sensor section blink during the test operation.) • Do not use any operating mode other than "❄ COOL" or "☀ HEAT". • Error is detected as usual.
4	When the test operation has finished, push the ⏻ button to stop the operation.
5	Turn off the air conditioner's power. Change Bit 1 of switch S003 on the sensor PC board from "on" to "off." Attach the adjustment corner cap with the sensors to the ceiling panel.

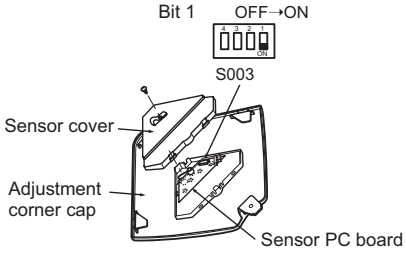

▼ Wireless remote control (Ceiling type)

Procedure	Operation content	
1	Turn on the air conditioner's power. This operation is not accepted for 5 minutes when power has been turned on for the first time after installation, and for 1 minute when power has been turned on the second and subsequent times after that. After the specified time has passed, perform the test operation.	
2	Push the ⏻ button and change the operating mode to "❄ COOL" or "☀ HEAT" with the Mode button. Then change the fan speed to "High" using the "Fan" button.	
3	Test cooling operation	Test heating operation
	Set the temperature to 64.4 °F (18 °C) using the Temperature setting button.	Set the temperature to 86 °F (30 °C) using the Temperature setting button.
4	After checking for the receiving "beep" tone, immediately push the Temperature setting button to set it to 66.2 °F (19 °C).	After checking for the receiving "beep" tone, immediately push the Temperature setting button to set it to 84.2 °F (29 °C).
5	After checking for the receiving "beep" tone, immediately push the Temperature setting button to set it to 64.4 °F (18 °C).	After checking for the receiving "beep" tone, immediately push the Temperature setting button to set it to 86 °F (30 °C).
6	Then repeat steps ***4*** → ***5*** → ***4*** → ***5***. After approximately 10 seconds, the "OPERATION" (green) and "READY" (yellow) display lamps on the sensor part of the wireless remote controller blink, and the air conditioner starts operating. If the lamps do not blink, repeat step ***2*** and the subsequent steps.	
7	After the test operation, push the Start/Stop button to stop the operation.	

Outline of test operation from the wireless remote controller
Test cooling operation:
Start → 64.4 °F (18 °C) → 66.2 °F (19 °C) → 64.4 °F (18 °C) → 66.2 °F (19 °C) → 64.4 °F (18 °C) → 66.2 °F (19 °C) → 64.4 °F (18 °C) → (Test operation) → Stop
Test heating operation:
Start → 86 °F (30 °C) → 84.2 °F (29 °C) → 86 °F (30 °C) → 84.2 °F (29 °C) → 86 °F (30 °C) → 84.2 °F (29 °C) → 86 °F (30 °C) → (Test operation) → Stop

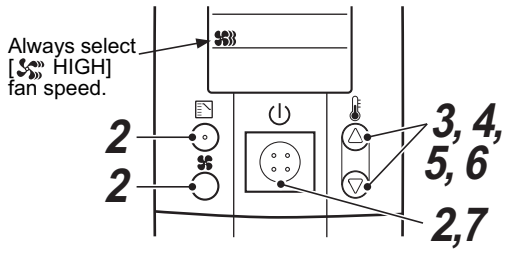

Test operation from the outdoor unit
- Refer to "8-7-2. Function to start/stop (ON/OFF) indoor unit from outdoor unit" in "8-7. Service support function."

Note: The test operation returns to normal operating mode after 60 minutes.

(2) Test operation

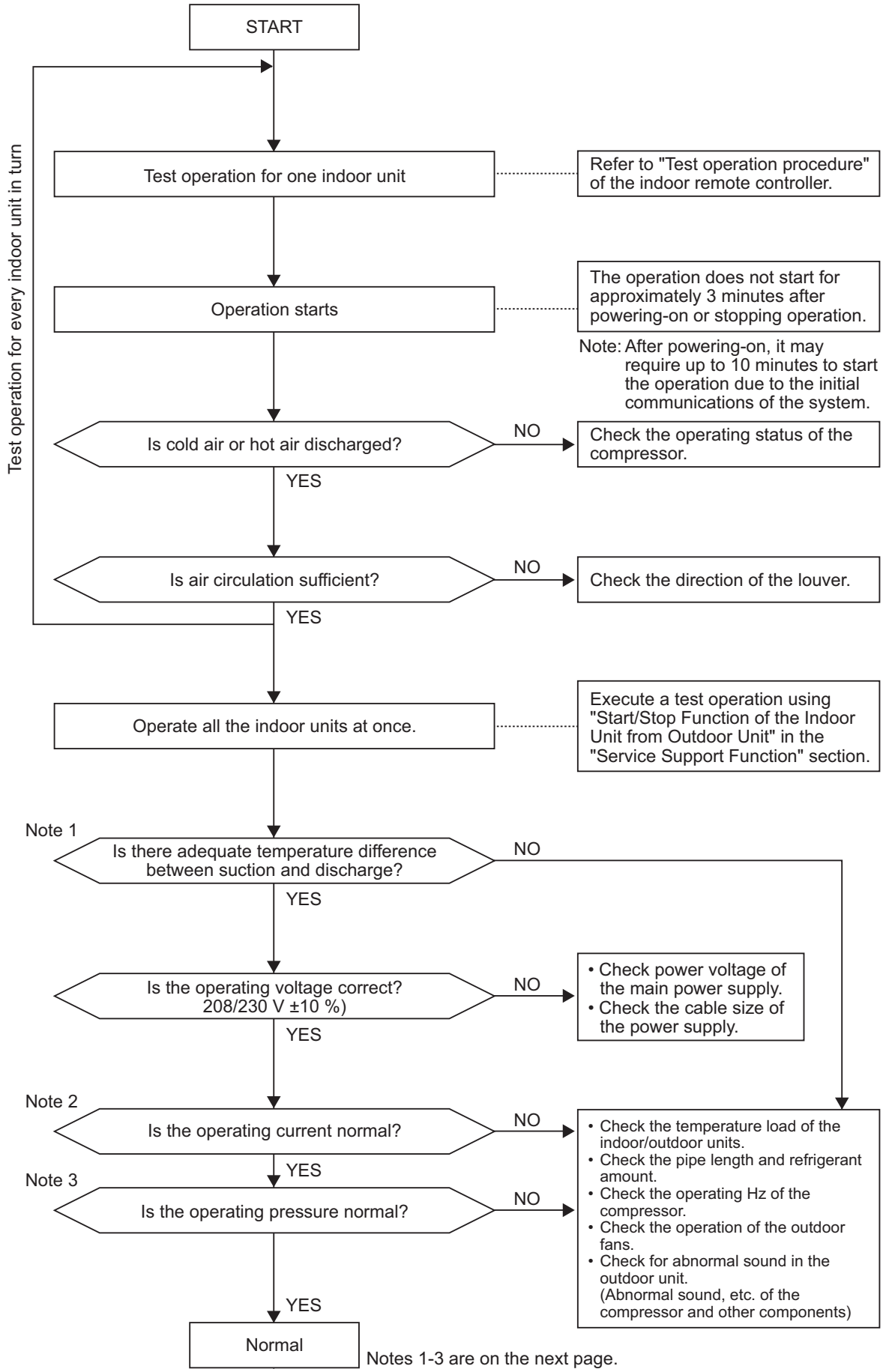

Notes 1-3 are on the next page.

Note 1: Criteria for the difference between suction and discharge temperatures

(1) Cooling operation

After operating for a minimum of 30 minutes in “COOL” mode, if the ΔT dry bulb temperature difference between suction and discharge air of the indoor unit is 46.4 °F (8 °C) or more, it is normal.

(2) Heating operation

After operating for a minimum of 30 minutes in “HEAT” mode, if the ΔT dry bulb temperature difference between suction and discharge air of the indoor unit is 59 °F (15 °C) or more, it is normal.

* If demand from the indoor unit on the outdoor unit is low because the difference between the temperature set by the remote controller and the temperature of the room is small, then the ΔT temperature difference is small.
* Consider that ΔT temperature difference may diminish in cases of a system in which the connected indoor unit capacity exceeds the outdoor unit capacity, the pipe length is long, or a large difference exists among outdoor units.

Note 2: Criteria for operating power current

The table below shows the maximum current for each outdoor unit. Under standard conditions, operating current is about 80% of the value shown in the table below.

Model MMY-MAP	0724HT9UL	0964HT9UL	1144HT9UL
Current value (A)	36	50	52

Note 3: Criteria for cycle status

(1) These data are based on operating a 4-way Cassette type air conditioner of 100% connection with standard piping length.

Data may vary depending on temperature conditions, installed pipe length, and room shape combinations, or indoor unit connection capacity.

For pressure criteria in different temperature conditions, refer to (2).

Model	Operating mode	Pressure (psi)		Pipe surface temperature (°F)					Number of compressor rotations (rps)*			Indoor fan	Air temp. condition (DB/WB) (°F)	
MMY-MAP		Pd	Ps	Discharge (TD)	Suction (TS)	Indoor heat exchanger (TCJ)	Outdoor heat exchanger (TE)	Liquid temp. (TL)	Comp.1	Comp.2	Comp.3		Indoor	Outdoor
0724HT9UL	Cooling	410	130	180	60	48	105	105	50	50	–	High	80/67	95/-
	Heating	420	102	181	40	100	35	90	50	50	–	High	70/-	47/43
0964HT9UL	Cooling	415	130	181	60	48	105	105	45	45	45	High	80/67	95/-
	Heating	430	102	183	38	100	35	90	50	50	50	High	70/-	47/43
1144HT9UL	Cooling	435	130	183	60	50	105	105	50	50	50	High	80/67	95/-
	Heating	420	100	181	39	100	35	90	57	57	57	High	70/-	47/43

* This compressor is driven with a 4-pole motor. The value of the compressor frequency (rps) measured with a clamp meter at the compressor lead line is two times the rotation count (rps) of the compressor.
* Each compressor may have a different frequency as a measure against resonance.
* The temperature of the indoor heat exchanger (TC) indicates TCJ sensor temperature when cooling, and TC2 sensor temperature when heating, respectively.

(2) Criteria for operating pressure

Operating mode		Cooling	Heating
Indoor temp. (°F)		64 – 90	59 – 77
Outdoor temp. (°F)		77 – 95	41 – 50
Pressure	Pd (psi)	290 – 465	365 – 475
	Ps (psi)	75 – 135	70 – 110

* Criteria after 15 minutes or more has passed since operating started

(3) On rotations of outdoor fans

Outdoor fans may rotate slowly to control pressure when cooling with low outer air temperature or heating with excessive load. For control content, also refer to items in Section 6, “Control Outline: Outdoor Unit, Outdoor Fan Control.”

8-7. Service support function

8-7-1. Check function for connecting of refrigerant and control lines

This function is provided to check misconnection of the refrigerant pipes and the control transmission line (Wiring over lines) between indoor unit and outdoor unit by using the switch on the interface P.C. board of the header unit. However, be sure to check the following items prior to executing this check function.

1 **This check function does not work when a group operation by remote control is performed and it is used over outdoor units.**

2 **When using this check system, be sure to check for each 1 line in the unit of outdoor unit. If checking the multiple lines at the same time, misjudgment may be caused.**

(Check procedure)

Power ON

Be sure to turn on the power at indoor side before power-ON of outdoor unit.

System capacity check Set the rotary switches SW01/SW02/SW03 on the interface P.C. board of the header unit to [1/2/3]. Then the system capacity is displayed on 7-segment display [A]. Check that this display surely matches with the expected system capacity.	(7-segment display) [A] [B] [.] [HP] ↑ System horsepower
Check No. of outdoor units Set the rotary switches SW01/SW02/SW03 on the interface P.C. board of the header unit to [1/3/3]. Then No. of outdoor units connected to the system is displayed on 7-segment display [A]. Check that this display surely matches with the expected No. of outdoor units.	(7-segment display) [A] [B] [.] [P] ↑ No. of connected outdoor units
Check No. of indoor units/No. of units with cooling thermo ON Set the rotary switches SW01/SW02/SW03 on the interface P.C. board of the header unit to [1/4/3]. Then No. of indoor units connected to the system is displayed on 7-segment display [A]. Check that this display surely matches with the expected No. of indoor units.	(7-segment display) [A] [B] [.] [C] ↑ ↑ No. of connected outdoor units / No. of units with cooling thermo ON
Check No. of indoor units/No. of units with heating thermo ON Set the rotary switches SW01/SW02/SW03 on the interface P.C. board of the header unit to [1/5/3]. Then No. of indoor units connected to the system is displayed on 7-segment display [A]. Check that this display surely matches with the expected No. of indoor units.	(7-segment display) [A] [B] [.] [H] ↑ ↑ No. of connected outdoor units / No. of units with heating thermo ON
Check incorrect wiring According to the indoor temperature, select one of the following items for setup of the rotary switches on the interface P.C. board of the header unit. Cooling: SW01/SW02/SW03 to [2/1/1] Heating: SW01/SW02/SW03 to [2/2/1]	(7-segment display) [A] [B] Cooling [J .C] [ ] Heating [J .H] [ ]

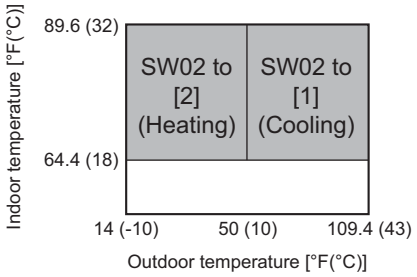

Ⓐ

Ⓐ

Operation start Press the push-switch SW04 on the interface P.C. board of the header unit for 2 seconds or more. The operation starts. Check that 7-segment display [B] shows [CC] for cooling and [HH] for heating.	(7-segment display) [A] [B] Cooling [C] [CC] Heating [H] [HH]

------ Operation

Confirmation of check results (1) Check that No. of misconnected indoor units is displayed on 7-segment display [B] after 15 minutes. (If there is no misconnection, [00P] is displayed.)	(7-segment display) [A] [B] [ ] [# # P] ↑ ↑ C or H No. of misconnected indoor units

------ This check operation requires 15 minutes even if there is no misconnection or there is any misconnection.

Confirmation of check results (2) Press the push-switch SW05 on the interface P.C. board of the header unit for 2 seconds or more. The indoor address in which error is being detected is displayed on 7-segment display [B]. If there are multiple indoor address in which error is being detected, they are successively exchanged and displayed. (When SW05 is turned on again, the display returns to display of No. of units.)	(7-segment display) [A] [B] [ ] [# #] ↑ ↑ C or H Address display of misconnected indoor unit

After check, return the rotary switches SW01/SW02/SW03 on the interface P.C. board of the header unit to [1/1/1].	(7-segment display) [A] [B] [U1] [ ]

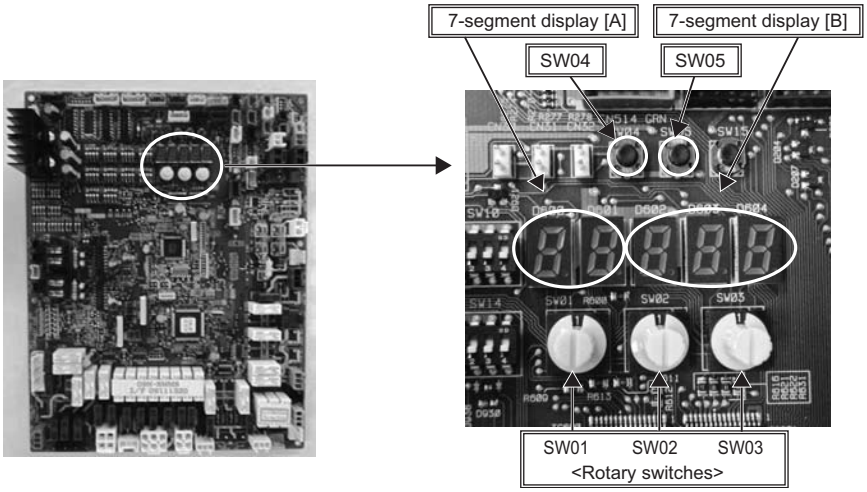

8-7-2. Function to start/stop (ON/OFF) indoor unit from outdoor unit

The following functions of the indoor unit can start or stop by the switches on the interface P.C. board of the header unit.

No	Function	Outline	Setup/Release	7-segment display
1	Cooling test operation	Changes the mode of all the connected indoor units collectively to cooling test operation. Note) Control operation same as usual test operation from remote control is performed.	[Setup] Set SW01/SW02/SW03 to [2/5/1], and press SW04 for 2 seconds or more. [Release] Return SW01/SW02/SW03 to [1/1/1].	Section A [C.] Section B [– C]
2	Heating test operation	Changes the mode of all the connected indoor units collectively to heating test operation. Note) Control operation same as usual test operation from remote control is performed.	[Setup] Set SW01/SW02/SW03 to [2/6/1], and press SW04 for 2 seconds or more. [Release] Return SW01/SW02/SW03 to [1/1/1].	Section A [H.] Section B [– H]
3	Batch start	Starts all the connected indoor units collectively. Note) The contents follow to the setup of remote controller.	[Setup] Set SW01/SW02/SW03 to [2/7/1], and press SW04 for 2 seconds or more. [Release] Return SW01/SW02/SW03 to [1].	Section A [C.H] Section B [11] [00] is displayed on Section B for 5 seconds.
	Batch stop	Stops all the connected indoor units collectively.	[Setup] Set SW01/SW02/SW03 to [2/7/1], and press SW05 for 2 seconds or more. [Release] Return SW01/SW02/SW03 to [1].	Section A [C.H] Section B [00] [00] is displayed on Section B for 5 seconds.
4	Individual start	Starts the specified indoor unit. Notes) • The contents follow to the setup of remote controller. • The other indoor units keep the status as they are.	[Setup] Set SW01 to [16], set SW02 and SW03 to address No. (1 to 64) to be started, and press SW04 for 2 seconds or more. [Release] Return SW01/SW02/SW03 to [1/1/1].	Section A [ ] Section B [ ] Section A: Displays the corresponding indoor address. Section B: Displays [11] for 5 seconds from operation-ON.
	Individual stop	Stops the specified indoor unit. Note) The other indoor units keep the status as they are.	[Setup] Set SW01 to [16], set SW02 and SW03 to address No. (1 to 64) to be stopped, and press SW05 for 2 seconds or more. [Release] Return SW01/SW02/SW03 to [1/1/1].	Section A [ ] Section B [ ] Section A: Displays the corresponding indoor address. Section B: Displays [00] for 5 seconds from operation-OFF.
	Individual test operation	Operates the specified indoor unit. Note) The other indoor units keep the status as they are.	[Setup] Set SW01 to [16], set SW02 and SW03 to address No. to be operated, and press SW04 for 10 seconds or more. [Release] Return SW01/SW02/SW03 to [1/1/1].	Section A [ ] Section B [ ] Section A: Displays the corresponding indoor address. Section B: Displays [FF] for 5 seconds from test operation-ON.

NOTE 1) This start/stop function only sends the signals from the outdoor unit to the indoor unit, such as start, stop, operation mode, etc. It does not resend the signals even if the indoor unit does not follow the sent signals.

NOTE 2) The above controls are not used during abnormal stop.

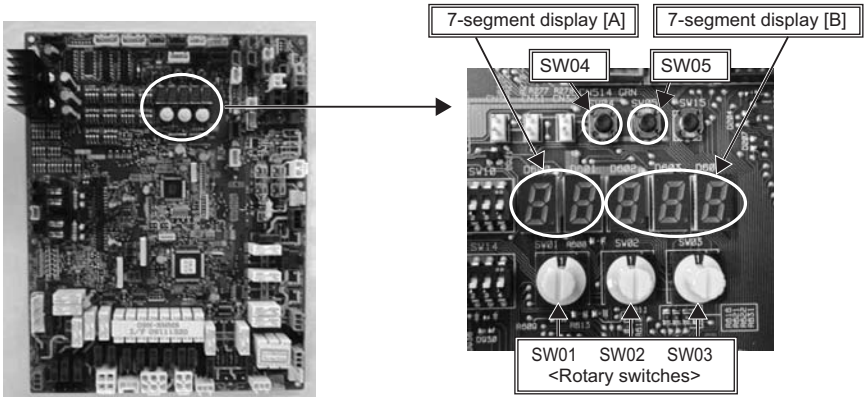

(1) Cooling test operation function

This function is provided to change collectively the mode of all the indoor units connected to the same system for the cooling test operation mode, by using switches on the interface board of the header unit.

<Operation procedure>

Power ON — Be sure to turn on power at the indoor side before power-ON of outdoor unit.

↓

Set SW01/SW02/SW03 on the interface P.C. board of the header unit to [2/5/1]. ([C.] is displayed on 7-segment display [A].)

↓

Press SW04 on the same board for 2 seconds or more. — Start

↓

[Test run] is displayed on the remote controller of the indoor unit to be operated.
Check that [– C] is displayed on 7-segment display [B] on the interface P.C. board of the header unit.

[A]	[B]
[C.]	[– C]

— Operation check

↓

Return SW01/SW02/SW03 on the interface P.C. board of the header unit to [1/1/1],
or press the push-switch SW05 for 2 seconds or more. — Stop/End

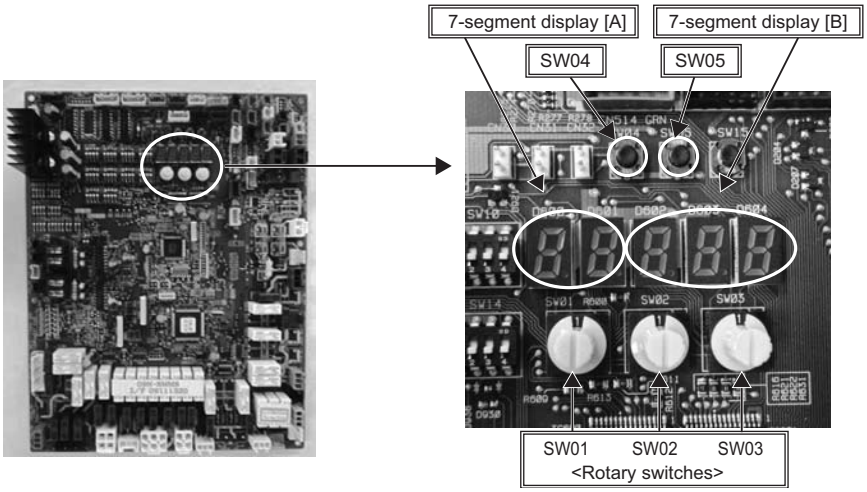

NOTE) The test operation returns to the normal operation after 60 minutes.

(2) Heating test operation function

This function is provided to change collectively the mode of all the indoor units connected to the same system for the heating test operation mode, by using switches on the interface board of the header unit.

<Operation procedure>

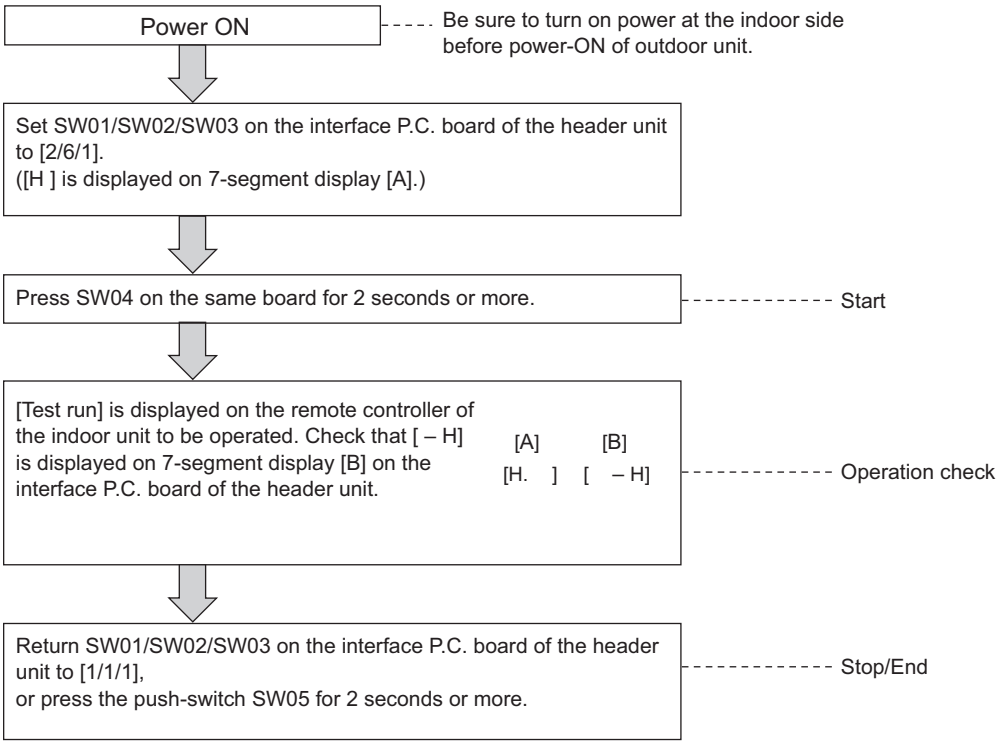

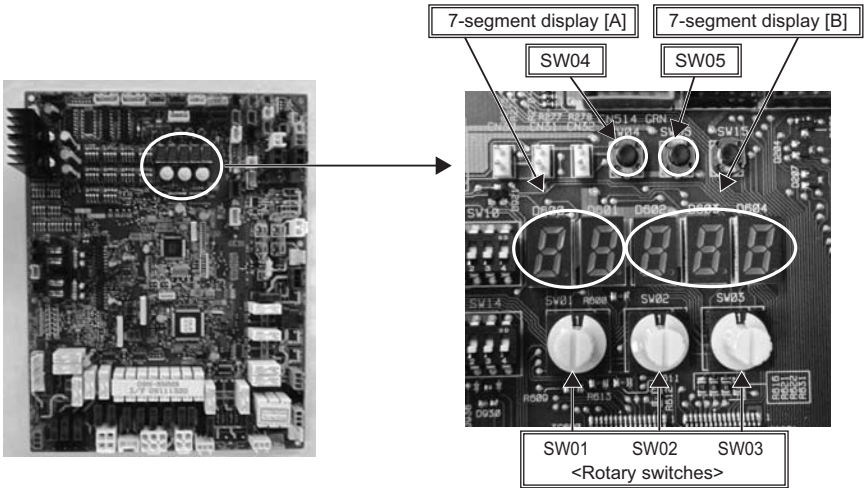

NOTE) The test operation returns to the normal operation after 60 minutes.

(3) Batch start/stop (ON/OFF) function

This function is provided to start/stop collectively all the indoor units connected to the same system by using switches on the interface board of the header unit.

<Operation procedure>

Power ON

Be sure to turn on power at the indoor side before power-ON of outdoor unit.

If an error is already displayed with SW01/SW02/SW03 being [1/1/1], return the status to normal one according to troubleshooting and then execute a test operation.

Set up the operation mode of the remote controller.
(If it is not set up, the operation continues with the current mode.)
(FAN/COOL/HEAT)

The unit which is not given with priority by heating priority control, cooling priority control, and selection of cooling or heating mode is not operated.
In this case, "⏻ operation ready" or "operation mode controlled" is displayed on the remote controller.

Set SW01/SW02/SW03 on the interface P.C. board of the header unit to [2/7/1].
([C.H] is displayed on 7-segment display [A].)

Press SW04 on the same board for 2 seconds or more. — Start

The indoor unit to be started operates. — Operation check

(If the discharge temperature does not change though COOL or HEAT has been set up from the remote controller, misconnection is considered.)

Press the push-switch SW05 on the interface P.C. board of the header unit for 2 seconds or more. — Stop

After test operation, return the rotary switches SW01/SW02/SW03 on the interface P.C. board of the header unit to [1/1/1]. — End

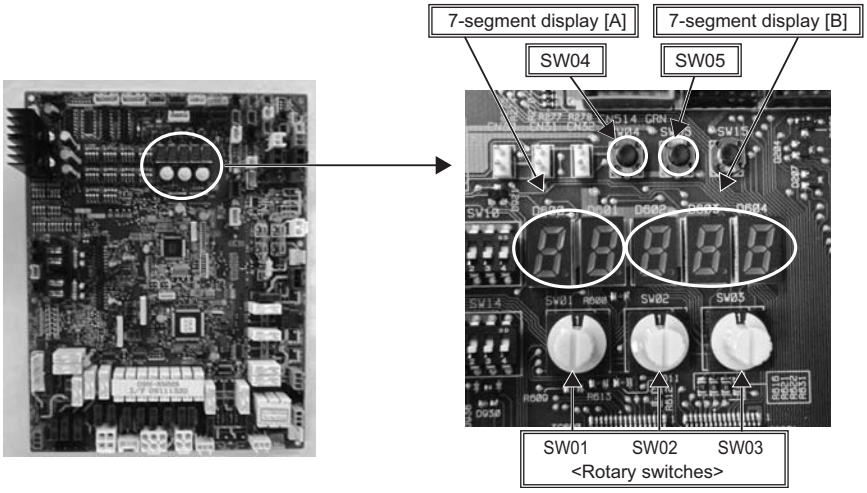

(4) Individual start/stop (ON/OFF) individual test operation function

This function is provided to start/stop (ON/OFF) individually each indoor unit connected to the same system by using switches on the interface board of the header unit.

Set SW01 [16] and set SW02, SW03 to indoor address No. (1 to 64) to be started (Refer to the following table*) - only the setup indoor unit starts operation.

(In the rotary switches of the indoor unit which operates in a group by the remote controller, the follower unit cannot be individually started or stopped. In this case, [- -] is displayed on 7-segment display [B] on the interface P.C. board of the header unit.)

<Operation procedure>

Power ON

Be sure to turn on power at the indoor side before power-ON of outdoor unit.

If an error is already displayed with SW01/SW02/SW03 being [1/1/1], return the status to normal one according to troubleshooting and then execute a test operation.

Set up the operation mode of the remote controller. (If it is not set up, the operation continues with the current mode.)

The unit which is not given with priority by heating priority control, cooling priority control, and selection of cooling or heating mode is not operated. In this case, "⏻ operation ready" or "operation mode controlled" is displayed on the remote controller.

Match the rotary switches on the interface P.C. board of the header unit to the following table*.

(7-segment display)

[A] [ ] ↑ Address display of corresponding indoor unit

[B] [ ] ↑ [00] is displayed for 5 seconds after operation-ON.

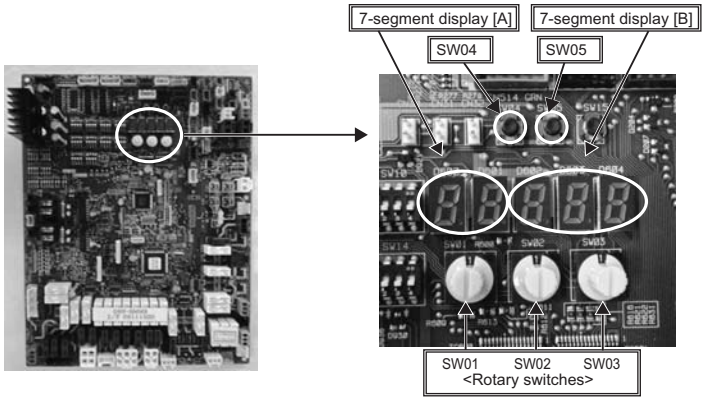

Press the push-switch SW04 on the same board for 2 seconds or more. (If pressed continuously for 10 seconds or more, the operation changes to the individual test operation.)

(7-segment display)

[A] [ ] ↑ Address display of corresponding indoor unit

[B] [ ] ↑ [11] is displayed for 5 seconds after operation-ON. (For individual test operation, [FF] is displayed.)

Start

The indoor unit to be started operates.

Operation check

(If the discharge temperature does not change though COOL or HEAT has been set up from the remote controller, misconnection is considered.)

Press the push-switch SW05 on the interface P.C. board of the header unit for 2 seconds or more.

(7-segment display)

[A] [ ] ↑ Address display of corresponding indoor unit

[B] [ ] ↑ [00] is displayed for 5 seconds after operation-ON.

After test operation, return the display select switches SW01/SW02/SW03 on the interface P.C. board of the header unit to [1/1/1].

End

*

SW01	SW02	SW03	Units to be operated
16	1~16	1	Address 1 to Address 16 } individually
16	1~16	2	Address 17 to Address 32 } individually
16	1~16	3	Address 33 to Address 48 } individually
16	1~16	4	Address 49 to Address 64 } individually

In individual start/stop

NOTE) The individual test operation returns to the normal operation after 60 minutes.

8-7-3. Error clearing function

(1) Clearing from the wired remote control

▼ Error clearing in outdoor unit

Error of the outdoor unit currently detected is cleared by the unit of one refrigerant circuit system to which the indoor units operated by the remote control is connected. (Error of the indoor unit is not cleared.)

For clearing errors, the service monitor function of the remote control is used.

<Method>

1. **Change the mode to service monitor mode by pushing CL + TEST buttons simultaneously for 4 seconds or more.**
2. **Using TEMP. buttons, set CODE No. to "FF".**
3. **The display in Section A in the following figure is counted with interval of 5 seconds as "0005" --> "0004" --> "0003" --> "0002" --> "0001" --> "0000".**
   When the count arrives "0000", the error is cleared.
   *However, counting from "0005" is repeated on the display.
4. **When TEST button is pushed, the status returns to the normal status.**

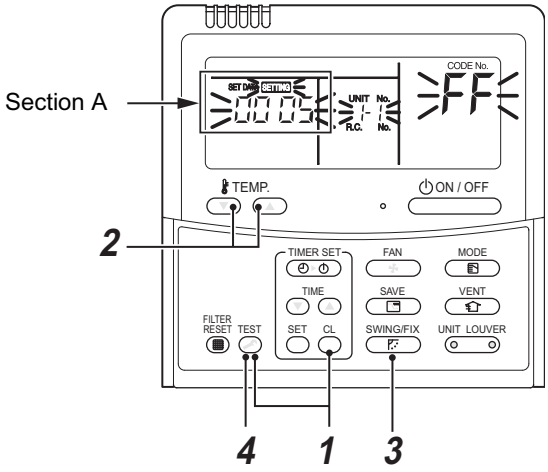

▼ Error clearing in indoor unit

Error in the indoor unit is cleared by ON / OFF button on the remote control.

(Only error of the indoor unit connected with operating remote control is cleared.)

(2) Clearing error by using switches on the interface board of the header unit

Using the switches on the interface P.C. board of the header unit, this function is to clear the currently detected error for each refrigerant circuit system without resetting the power supply.
Errors in both outdoor and indoor units are once cleared, and error detection is performed again.

Set the rotary switches on the interface P.C. board of the header unit as follows. Set SW01/SW02/SW03 to [2/16/1]	7-segment display [A] [B] [E r] [ ]

↓

Press the push-switch SW04 on the same board for 5 seconds or more.

↓

[C L] is displayed in 7-segment display [B] on the board (for 5 seconds), and the error is completely cleared.	7-segment display [A] [B] [E r] [C L]

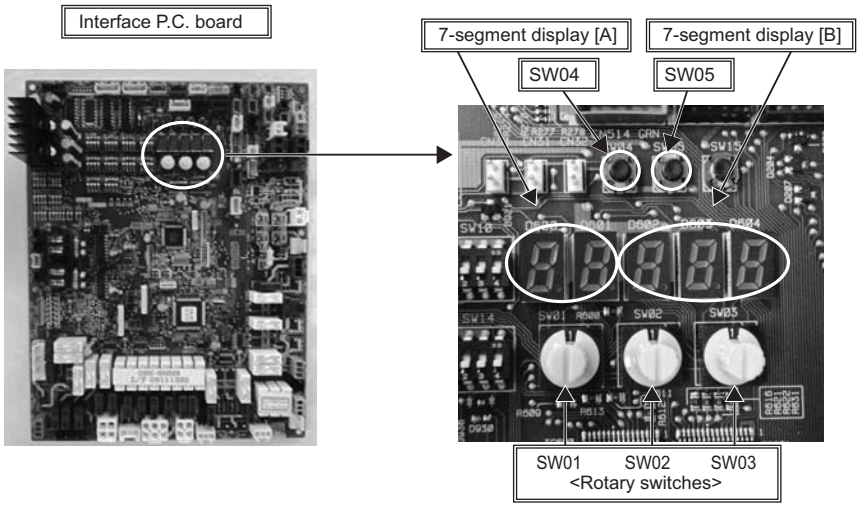

(3) Clearing error by resetting power

This function is provided to clear error in a system by resetting the power of all the outdoor and the indoor units. As same as the clearing method by the interface P.C. board, errors of both the outdoor and the indoor units are once cleared, and error detection is performed again.

<Method>

(1) Be sure to reset power of both the outdoor and the indoor units.

(2) Turn on the power of the indoor unit prior to the power of the outdoor unit.
(If the power is turned on in reverse order, a check code [E19] (No. of header unit error) is output.)

NOTE) After power reset, it requires usually 3 minutes to power-on due to the initial communication of the system. In some cases, it requires max. 10 minutes.

8-7-4. Remote control distinction function

This function is provided to distinguish the remote control connected to the indoor unit from the outdoor unit for a refrigerant circuit system by using switches on the interface P.C. board of the header unit.

<Distinction procedure>

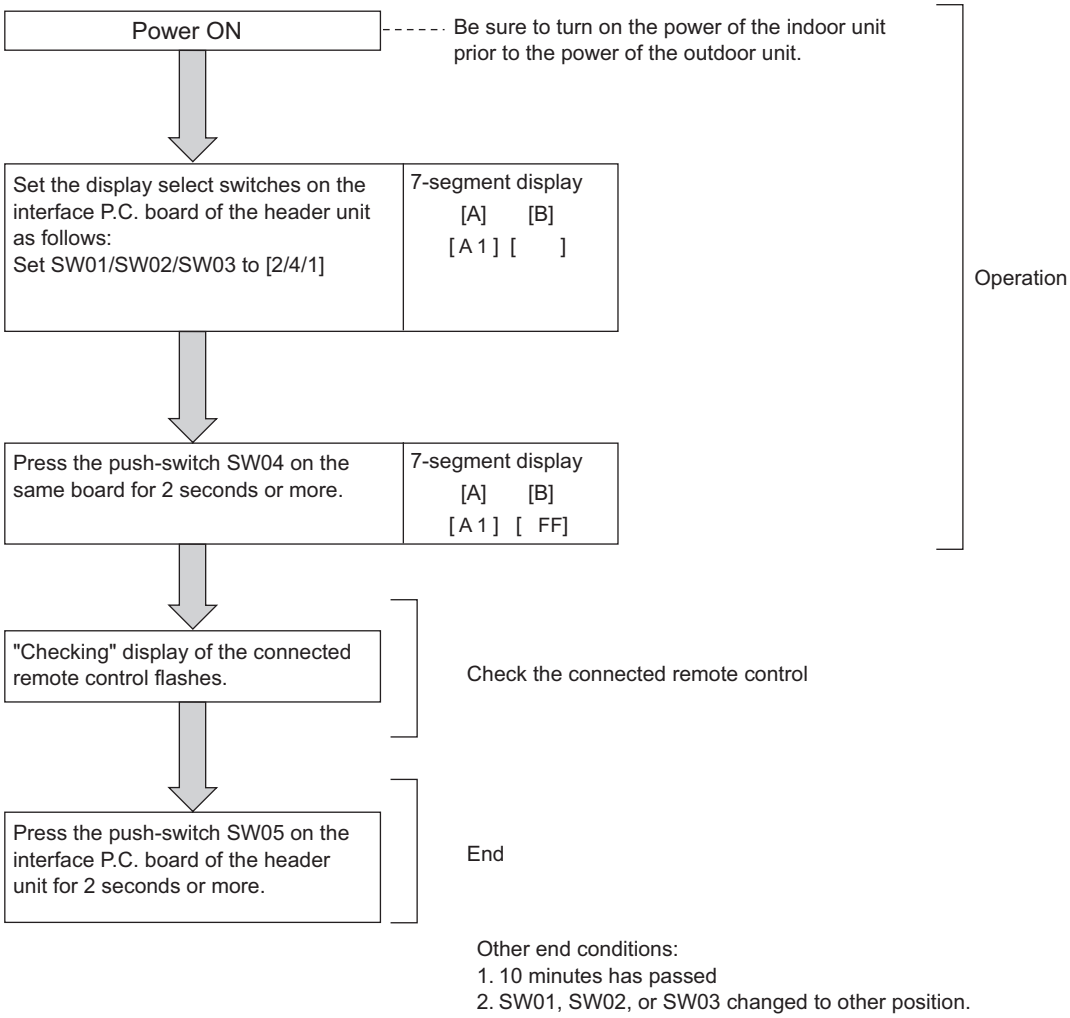

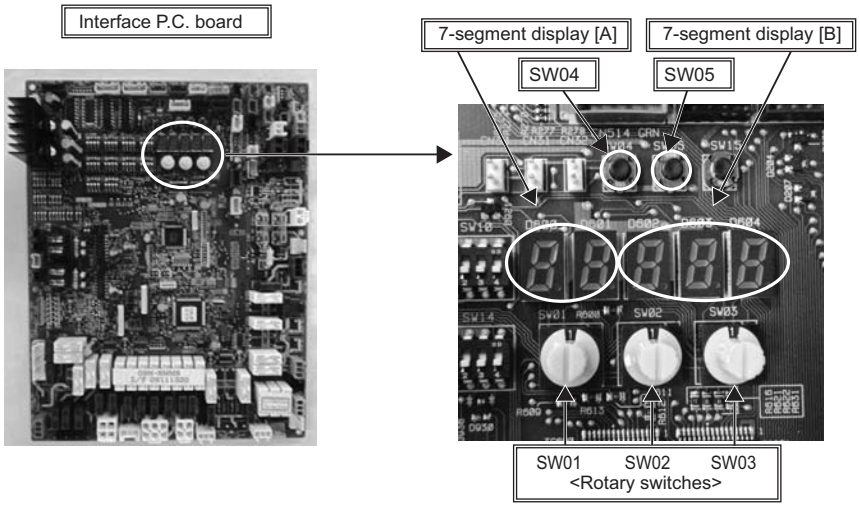

8-7-5. Pulse motor valve (PMV) forced open/close function in indoor unit

This function is provided to open or close forcedly PMV for 2 minutes in all the indoor units by the switch operation on the interface P.C. board of the header unit.
This function is also used to open PMV fully when turning off the power and executing an operation.

<Operation>

[Open fully]

Set the switches SW01/SW02/SW03 on the interface P.C. board of the header unit to [2/3/1], and press SW04 for 2 seconds or more.
(Display appears on 7-segment display for 2 minutes as follows.) [P] [FF]

[Close fully]

Set the switches SW01/SW02/SW03 on the interface P.C. board of the header unit to [2/3/1], and press SW05 for 2 seconds or more.
(Display appears on 7-segment display for one minute as follows.) [P] [00]

[Clear]

After 2 minutes (1 minutes for “Close fully”) after setting up, the opening automatically returns to the normal opening.

8-7-6. Pulse motor valve (PMV) forced open fully/close fully function in outdoor unit

This function is provided to forcedly open or close fully P.M.V. (PMV1/PMV2, PMV4) used in the outdoor unit for 2 minutes.

[PMV1/PMV2 Open fully]

On the interface board of the outdoor unit, set the dip switch [SW12·bit1] to [OFF], [SW12·bit2] to [OFF], and short-circuit CN30.

[PMV1/PMV2 Close fully]

On the interface board of the outdoor unit, set the dip switch [SW12·bit1] to [OFF], [SW12·bit2] to [OFF], and short-circuit CN31.

[PMV4 Open fully]

On the interface board of the outdoor unit, set the dip switch [SW12·bit1] to [OFF], [SW12·bit2] to [ON], and short-circuit CN30.

[PMV4 Close fully]

On the interface board of the outdoor unit, set the dip switch [SW12·bit1] to [OFF], [SW12·bit2] to [ON], and short-circuit CN31.

[Clear]

For both open fully and close fully, after 2 minutes, the opening returns to the normal opening.
Be sure to remove the cord used for short-circuit after confirmation, and set the dip switch [SW12·bit1] to [OFF] and [SW12·bit2] to [OFF].

8-7-7. Solenoid valve forced open/close function in outdoor unit

This function is provided to forcedly open each solenoid valve mounted in the outdoor unit by the switch operation on the interface P.C. board in the outdoor unit. Use this function to check there is no refrigerant clogging with ON/OFF operation of the solenoid valve.

[Operation]

(1) Set the switches SW01/SW02/SW03 on the interface P.C. board of the outdoor unit to [2/1/3].

(2) When [H. r] is displayed in 7-segment display [A], keep pressing the switch SW04 for 2 seconds or more.

(3) From when [2] is displayed in 7-segment display [B], SV2 is turned on.

(4) After then, ON and OFF of each solenoid valve are exchanged by changing the setup number of the switch SW02.
(ON/OFF output pattern of each solenoid valve is as shown below.)

NOTE 1) Display in 7-segment display [B] is exchanged just when the number of SW02 has been changed; on the other hand, the solenoid valve output is exchanged when SW02 has been kept with the same number for 5 seconds or more.

NOTE 2) The mark [O] in the table indicates that the corresponding solenoid valve is forcedly turned on.

NOTE 3) The mark [-] in the table indicates that ON/OFF of the solenoid valve is controlled based upon the specifications of the air conditioner.

NOTE 4) The mark [×] in the table indicates that the corresponding solenoid valve is forcedly turned off with this operation.

NOTE 5) The case heater output is for both the compressor and accumulator heaters.

SW02	7-segment display [B]	Operation pattern of solenoid valve												Case heater output relay
		SV2	SV5	SV41	SV42	SV43	SV3A	SV3B	SV3C	SV3D	SV3E	SV3F	SV61	
1	[2]	O	-	-	-	-	-	-	-	-	O	-	-	O
2	[5]	-	O	-	-	-	-	-	-	-	O	-	-	O
3	[41]	-	-	O	-	-	-	-	-	-	O	-	-	O
4	[42]	-	-	-	O	-	-	-	-	-	O	-	-	O
5	[43]	-	-	-	-	O	-	-	-	-	O	-	-	O
6	[3A]	-	-	-	-	-	O	-	-	-	O	-	-	O
7	[3b]	-	-	-	-	-	-	O	-	-	O	-	-	O
8	[3C]	-	-	-	-	-	-	-	O	×	O	O	-	O
9	[3d]	-	-	-	-	-	-	-	-	O	×	O	-	O
10	[3–]	-	-	-	-	-	O	O	O	×	O	×	-	O
11	[61]	-	-	-	-	-	-	-	-	-	O	-	O	O
12~15		-	-	-	-	-	-	-	-	-	O	-	-	O
16	ALL	O	O	O	O	O	O	O	O	O	O	O	O	O

* If the outdoor unit has no valve, then 7-segment display [B] shows [– –].

[Clear]

Return switches SW01/SW02/SW03 on the interface P.C. board to [1/1/1].

NOTE) As this function is not based on the specified general control, be sure to release this mode after checking.

8-7-8. Fan operation check in outdoor unit

This function is provided to check the fan operation of the outdoor unit by using switches on the interface P.C. board in the outdoor unit. The frequency of the fan speed can be controlled by setting of the switches. Use this function to check the operation or abnormal sound in the fan system. And, use this function while the system is stopped.

NOTE) Do not use this function during operation of the compressor. It may damage the compressor.

[Operation]

(1) Set the switches SW01/SW02/SW03 on the interface P.C. board of the outdoor unit to [2/1/4].

(2) When [F. d] is displayed in 7-segment display [A], keep pressing the switch SW04 for 2 seconds or more.

(3) When [63] is displayed in 7-segment display [B], the fan starts operation. (Max. mode operation)

(4) After that, by changing the setup number of the switches SW02 and SW03, 7-segment display [B] and the fan mode are changed.
(Mode output pattern of the fan is as follows.)

SW02	SW03	7-segment display [B]	Fan mode
1	4	[63]	63
2		[62]	62
3		[61]	61
4		[60]	60
5		[59]	59
6		[58]	58
7		[57]	57
8		[56]	56
9		[55]	55
10		[54]	54
11		[53]	53
12		[52]	52
13		[51]	51
14		[50]	50
15		[49]	49
16		[48]	48
1	5	[47]	47
2		[46]	46
3		[45]	45
4		[44]	44
5		[43]	43
6		[42]	42
7		[41]	41
8		[40]	40
9		[39]	39
10		[38]	38
11		[37]	37
12		[36]	36
13		[35]	35
14		[34]	34
15		[33]	33
16		[32]	32

SW02	SW03	7-segment display [B]	Fan mode
1	6	[31]	31
2		[30]	30
3		[29]	29
4		[28]	28
5		[27]	27
6		[26]	26
7		[25]	25
8		[24]	24
9		[23]	23
10		[22]	22
11		[21]	21
12		[20]	20
13		[19]	19
14		[18]	18
15		[17]	17
16		[16]	16
1	7	[15]	15
2		[14]	14
3		[13]	13
4		[12]	12
5		[11]	11
6		[10]	10
7		[9]	9
8		[8]	8
9		[7]	7
10		[6]	6
11		[5]	5
12		[4]	4
13		[3]	3
14		[2]	2
15		[1]	1
16		[0]	0

[Clear]

This function is cleared by one of the following operations.

(1) When SW01 setting number was changed to other number.

(2) Press-switch SW05 was pressed for 2 seconds or more.

8-7-9. Abnormal outdoor unit discrimination method by fan operating function

This function is provided to forcedly operate the fan of the outdoor unit in which an error occurred or the fan of the normal outdoor unit by the switch operation on the interface P.C. board in the header unit.
To specify which one of the follower units connected to the system was faulty, use this function for the system stop due to a follower unit fault (Check code [E28]).

[Operation]

<In case to operate the fan in the erroneous outdoor unit only>

(1) Check that the switches SW01/SW02/SW03 on the interface P.C. board in the header unit are set to [1/1/1].

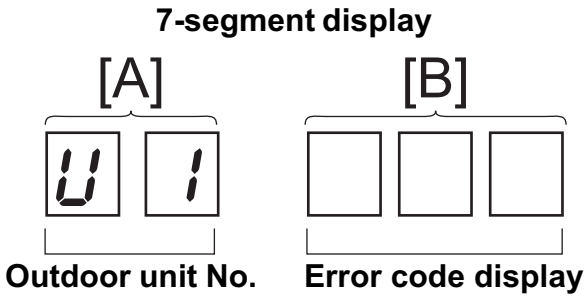

(2) Press the push-switch SW04 for 2 seconds or more.
(3) [E 1] is displayed on 7-segment display [A].
(4) The fan of the outdoor unit in which error occurred starts operation within approx. 10 seconds after [E 1] was displayed.

<In case to operate the fans in all the normal outdoor units>

(1) Check that the switches SW01/SW02/SW03 on the interface P.C. board in the header unit are set to [1/1/1].
(2) Press the push-switches SW04 and SW05 at the same time for 2 seconds or more.
(3) [E 0] is displayed on 7-segment display [A].
(4) The fans of all the normal outdoor units start operation with the Max. fan speed within approx. 10 seconds after [E 0] was displayed.

[Release]

Press the push-switch SW05 on the interface P.C. board in the header unit for 2 seconds or more.
The outdoor fan which was operated stops.
* Check that [U. 1] is displayed on 7-segment display [A], and then finish the work.

8-7-10. Manual adjustment function of outside temperature (TO) sensor

This function is provided to fix TO sensor value manually by the switch operation on the interface P.C. board in the outdoor unit. When the unit stops abnormally due to TO sensor failure, etc, an emergent operation is available by setting up the value manually to position near the current outside temperature.

[Operation]

(1) Set the rotary switches on the interface P.C. board to numbers as follows:
- SW01/SW02/SW03 to [2/1/15]
- 7-segment display: [t o]

(2) Keep pressing the push-switch SW04 on the interface P.C. board for 1 second or more. The mode changes to the TO sensor value fix manual mode.

(3) As shown in the following table, TO sensor value can be fixed by setting the rotary switch SW02 on the interface P.C. board.

[Clear]

Return SW01/SW02/SW03 on the interface P.C. board in the outdoor unit to [1/1/1].

SW02	7-segment display [B]	TO sensor value
1	[50]	50 °F
2	[59]	59 °F
3	[68]	68 °F
4	[77]	77 °F
5	[86]	86 °F
6	[95]	95 °F
7	[104]	104 °F
8	[109]	109 °F
9	[113]	113 °F
10	[5]	5 °F
11	[14]	14 °F
12	[23]	23 °F
13	[32]	32 °F
14	[35]	35 °F
15	[41]	41 °F
16	[44]	44 °F

NOTE) If operated with TO sensor fixed by this function, the system control operation of the air conditioner may not be based on the specification of the product. Therefore an emergent operation should be restricted to a day or so.

<Service support function list>

SW01	SW02	SW03	7-segment display [A]	Function contents
2	1	1	[J . C]	Refrigerant circuit and control communication line check function (Cooling operation)
	2		[J . H]	Refrigerant circuit and control communication line check function (Heating operation)
	3		[P .]	Indoor PMV forced full open function
	4		[A . 1]	Indoor remote controller discriminating function
	5		[C .]	Cooling test operation function
	6		[H .]	Heating test operation function
	7		[C . H]	Indoor collective start/stop (ON/OFF) function
	11		[r . d]	Outdoor refrigerant recovery operation function (Pump down function)
	16		[E . r]	Error clear function

2	1~16	3	[H . r]	Solenoid valve forced open/close function
2		4~7	[F . d]	Fan forced operation function
2		15	[t . o]	Outside temperature sensor manual adjustment function

16	1~16	1	[0 1]~[1 6]	Indoor No. 1 to 16 unit	Indoor individual start/stop (ON/OFF) function
		2	[1 7]~[3 2]	Indoor No. 17 to 32 unit	
		3	[3 3]~[4 8]	Indoor No. 33 to 48 unit	
		4	[4 9]~[6 4]	Indoor No. 49 to 64 unit	

SW01	SW02	SW03	7-segment display [A/B]	Function contents
1	1	1	[U 1] [E28]	Follower unit error / Corresponding unit fan operation function

8-7-11. Monitor function of remote control switch

When using a remote control with the model name RBC-AMT32UL, the following monitor functions can be used.

Calling of display screen

<Content>

The sensor temperature or operation status of the remote control, indoor unit, or the outdoor unit can be known by calling up the service monitor mode from the remote control.

[Procedure]

1 **Push TEST + CL buttons simultaneously for 4 seconds or more to call up the service monitor mode.**
The service monitor goes on, and temperature of the CODE No. 00 is firstly displayed.

2 **Push the temperature setup TEMP. buttons to select the CODE No. to be monitored.**
For displayed codes, refer to the table next page.

3 **Push SET button to determine the item to be monitored.**
Then monitor the sensor temperature or operation status of indoor unit and the outdoor unit in the corresponding refrigerant line.

4 **Pushing TEST button returns the display to the normal display.**

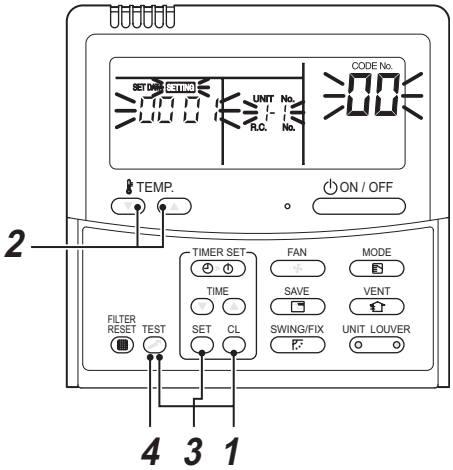

	CODE No.	Data name	Display format	Unit	Remote controller display example
Indoor unit data *2	00	Room temperature (During control)	×1	°C	[0027]=27 °C
	01	Room temperature (Remote controller)	×1	°C	
	02	Indoor suction temperature (TA)	×1	°F	[0080]=80 °F
	03	Indoor coil temperature (TCJ)	×1	°F	
	04	Indoor coil temperature (TC2)	×1	°F	
	05	Indoor coil temperature (TC1)	×1	°F	
	06	Indoor discharge temperature (TF) *1	×1	°F	
	08	Indoor PMV opening	×1/10	pls	[0150]=1500 pulse
System data	0A	No. of connected indoor units	×1	unit	[0024]=24 units
	0B	Total capacity of connected indoor units	×10	ton	[0215]=21.5 ton
	0C	No. of connected outdoor units	×1	unit	[0002]=2 units
	0D	Total capacity of outdoor units	×10	ton	[0160]=16 ton

	CODE No.		Data name	Display format	Unit	Remote controller display example
	U1	U2				
Outdoor unit individual data 1 *3	10	20	High-pressure sensor detention pressure (Pd)	×10	psi	[4350]=435 psi
	11	21	Low-pressure sensor detention pressure (Ps)	×10	psi	
	12	22	Compressor 1 discharge temperature (Td1)	×1	°F	[0080]=80 °F
	13	23	Compressor 2 discharge temperature (Td2)	×1	°F	
	14	24	Compressor 3 discharge temperature (Td3)	×1	°F	
	15	25	Suction temperature (TS)	×1	°F	
	16	26	Outdoor coil temperature 1 (TE1)	×1	°F	
	17	27	Outdoor coil temperature 2 (TE2)	×1	°F	
	18	28	Temperature at liquid side (TL)	×1	°F	
	19	29	Outside ambient temperature (TO)	×1	°F	
	1A	2A	PMV1 + 2 opening	×1	pls	[0500]=500 pulse
	1B	2B	PMV4 opening	×1	pls	
	1C	2C	Compressor 1 current (I1)	×10	A	[0135]=13.5 A
	1D	2D	Compressor 2 current (I2)	×10	A	
	1E	2E	Compressor 3 current (I3)	×10	A	
	1F	2F	Outdoor fan current (IFan)	×10	A	

	CODE No.		Data name	Display format	Unit	Remote controller display example
	U1	U2				
Outdoor unit individual data 2 *4	50	60	Compressor 1 revolutions	×10	rps	[0642]=64.2 rps
	51	61	Compressor 2 revolutions	×10	rps	
	52	62	Compressor 3 revolutions	×10	rps	
	53	63	Outdoor fan mode	×1	mode	[0058]= 58 mode
	54	64	Compressor IPDU 1 heat sink temperature	×1	°F	[0080]=80 °F
	55	65	Compressor IPDU 2 heat sink temperature	×1	°F	
	56	66	Compressor IPDU 3 heat sink temperature	×1	°F	
	57	67	Outdoor fan IPDU heat sink temperature	×1	°F	
	58	-	Heating/cooling recovery controlled *5	0: Normal 1: Recovery controlled		[0010]=Heating recovery controlled [0001]=Cooling recovery controlled
	59	-	Pressure release *5	0: Normal 1: Release controlled		[0010]=Pressure release controlled
	5A	-	Discharge temperature release *5			[0001]=Discharge temperature release controlled
	5B	-	Follower unit release (U2/U2/U4 outdoor units) *5			[0100]=U2 outdoor unit release controlled [0010]=U3 outdoor unit release controlled [0001]=U4 outdoor unit release controlled
	5F	6F	Outdoor unit capacity	×10	ton	[0080]=8 ton

*1 Only a part of indoor unit types is installed with the discharge temperature sensor. This temperature is not displayed for other types.
*2 When the units are connected to a group, data of the header indoor unit only can be displayed.
*3 The first digit of an CODE No. indicates the outdoor unit number.
*4 The upper digit of an CODE No. -4 indicates the outdoor unit number.
1∗, 5∗ ... U1 outdoor unit (Header unit)
2∗, 6∗ ... U2 outdoor unit (Follower unit 1)
5 Only the CODE No. 5 of U1 outdoor unit (Header unit) is displayed.

9 Troubleshooting

9-1. Overview

(1) Before engaging in troubleshooting

(a) Applicable models

All Super Module Multi (SMMS-i) models.

(Indoor units: MMO-APOOO, Outdoor units: MMY-MAPOOO4HT9UL)

(b) Tools and measuring devices required

- Screwdrivers (Philips, flat head), spanners, long-nose pliers, nipper, pin to push reset switch, etc.
- Multimeter, thermometer, pressure gauge, etc.

(c) Things to check prior to troubleshooting (behaviors listed below are normal)

NO.	Behavior	Possible cause
1	A compressor would not start	• Could it just be the 3-minute delay period (3 minutes after compressor shutdown)? • Could it just be the air conditioner having gone thermo OFF? • Could it just be the air conditioner operating in fan mode or put on the timer? • Could it just be the system going through initial communication?
2	An indoor fan would not start	• Could it just be cold air discharge prevention control, which is part of heating?
3	An outdoor fan would not start or would change speed for no reason	• Could it just be cooling operation under low outside temperature conditions? • Could it just be defrosting operation?
4	An indoor fan would not stop	• Could it just be the elimination of residual heat being performed as part of the air conditioner shutdown process after heating operation?
5	The air conditioner would not respond to a start/stop command from a remote control	• Could it just be the air conditioner operation under external or remote control?

(2) Troubleshooting procedure

When a fault occurs, proceed with troubleshooting in accordance with the procedure shown below.

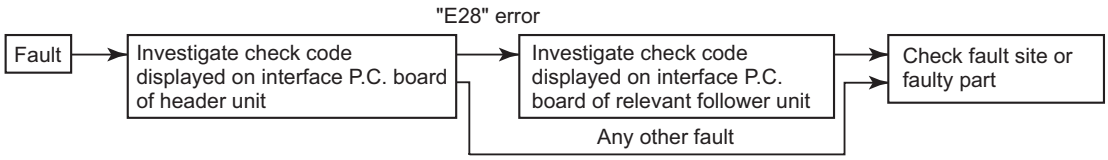

NOTE

Rather than a genuine fault (see the List of Check Codes below), the problem could have been caused by a microprocessor malfunction attributable to a poor quality of the power source or an external noise. Check for possible noise sources, and shield the remote control wiring and signal wires as necessary.

9-2. Troubleshooting method

The remote controllers (main remote controller and central control remote controller) and the interface P.C. board of an outdoor unit are provided with an LCD display (remote controller) or a 7-segment display (outdoor interface P.C. board) to display operational status. Using this self-diagnosis feature, the fault site/faulty part may be identified in the event of a fault by following the method described below.

The list below summarizes check codes detected by various devices. Analyze the check code according to where it is displayed and work out the nature of the fault in consultation with the list.

- When investigating a fault on the basis of a display provided on the indoor remote controller or TCC-LINK central control remote controller - See the “TCC-LINK remote control or main remote controller display” section of the list.
- When investigating a fault on the basis of a display provided on an outdoor unit - See the “Outdoor 7-segment display” section of the list.
- When investigating a fault on the basis of a wireless remote controller-controlled indoor unit - See the “Light sensor indicator light block” section of the list.

List of Check Codes (Indoor Unit)

(Error detected by indoor unit)

IPDU: Intelligent Power Drive Unit (Inverter P.C. board)
○ : Lighting, ◎ : Flashing, ● : Goes off
ALT.: Flashing is alternately when there are two flashing LED
SIM: Simultaneous flashing when there are two flashing LED

Check code			Display of receiving unit				Typical fault site	Description of error
TCC-LINK central control or main remote controller display	Outdoor 7-segment display		Indicator light block					
		Sub-code	Operation	Timer	Ready	Flash		
E03	–	–	◎	●	●		Indoor-remote controller periodic communication error	Communication from remote controller or network adaptor has been lost (so has central control communication).
E04	–	–	●	●	◎		Indoor-outdoor periodic communication error	Signals are not being received from outdoor unit.
E08	E08	Duplicated indoor address	◎	●	●		Duplicated indoor address	Indoor unit detects address identical to its own.
E10	–	–	◎	●	●		Indoor inter-MCU communication error	MCU communication between main controller and motor microcontroller is faulty.
E18	–	–	◎	●	●		Error in periodic communication between indoor header and follower unit	Periodic communication between indoor header and follower units cannot be maintained.
F01	–	–	◎	◎	●	ALT	Indoor heat exchanger temperature sensor (TCJ) error	Heat exchanger temperature sensor (TCJ) has been open/short-circuited.
F02	–	–	◎	◎	●	ALT	Indoor heat exchanger temperature sensor (TC2) error	Heat exchanger temperature sensor (TC2) has been open/short-circuited.
F03	–	–	◎	◎	●	ALT	Indoor heat exchanger temperature sensor (TC1) error	Heat exchanger temperature sensor (TC1) has been open/short-circuited.
F10	–	–	◎	◎	●	ALT	Ambient temperature sensor (TA) error	Ambient temperature sensor (TA) has been open/ short-circuited.
F11	–	–	◎	◎	●	ALT	Discharge temperature sensor (TF) error	Discharge temperature sensor (TF) has been open/short-circuited.
F29	–	–	◎	◎	●	SIM	P.C. board or other indoor error	Indoor EEPROM is abnormal (some other error may be detected).
L03	–	–	◎	●	◎	SIM	Duplicated indoor group header unit	There is more than one header unit in group.
L07	–	–	◎	●	◎	SIM	Connection of group control cable to stand-alone indoor unit	There is at least one stand-alone indoor unit to which group control cable is connected.
L08	L08	–	◎	●	◎	SIM	Indoor group address not set	Address setting has not been performed for one or more indoor units (also detected at outdoor unit end).
L09	–	–	◎	●	◎	SIM	Indoor capacity not set	Capacity setting has not been performed for indoor unit.
L20	–	–	◎	○	◎	SIM	Duplicated central control address	There is duplication in central control address setting.
L30	L30	Detected indoor unit No.	◎	○	◎	SIM	Indoor external error input (interlock)	Unit shutdown has been caused by external error input (CN80).
P01	–	–	●	◎	◎	ALT	Indoor AC fan error	Indoor AC fan error is detected (activation of fan motor thermal relay).
P10	P10	Detected indoor unit No.	●	◎	◎	ALT	Indoor overflow error	Float switch has been activated.
P12	–	–	●	◎	◎	ALT	Indoor DC fan error	Indoor DC fan error (e.g. overcurrent or lock-up) is detected.
P31	–	–	◎	●	◎	ALT	Other indoor unit error	Follower unit cannot be operated due to header unit alarm (E03/L03/L07/L08).

(Error detected by main remote control)

Check code			Display of receiving unit				Typical fault site	Description of error
Main remote controller	Outdoor 7-segment display		Indicator light block					
		Sub-code	Operation	Timer	Ready	Flash		
E01	–	–	◎	●	●		No master remote control, faulty remote control communication (reception)	Signals cannot be received from indoor unit; master remote control has not been set (including two remote control control).
E02	–	–	◎	●	●		Faulty remote control communication (transmission)	Signals cannot be transmitted to indoor unit.
E09	–	–	◎	●	●		Duplicated master remote control	Both remote controls have been set as master remote control in two remote control control (alarm and shutdown for header unit and continued operation for follower unit)

(Error detected by central control device)

Check code			Display of receiving unit				Typical fault site	Description of error
TCC-LINK central control	Outdoor 7-segment display		Indicator light block					
		Sub-code	Operation	Timer	Ready	Flash		
C05	–	–	No indication (when wired remote control also in use)				Faulty central control communication (transmission)	Central control device is unable to transmit signal due to duplication of central control device.
C06	–	–					Faulty central control communication (reception)	Central control device is unable to receive signal.
–	–	–					Multiple “1:1 Model” Connection Interface	Multiple “1:1 Model” Connection Interface are connected to remote control communication line.
C12	–	–	–				Blanket alarm for general-purpose device control interface	Device connected to general-purpose device control interface for TCC-LINK is faulty.
P30	–	–	As per alarm unit (see above)				Group control follower unit error	Group follower unit is faulty (unit No. and above detail [***] displayed on main remote control)

Note: The same error, e.g. a communication error, may result in the display of different check codes depending on the device that detects it. Moreover, check codes detected by the main remote control/central control device do not necessarily have a direct impact on air conditioner operation.

List of Check Codes (Outdoor Unit)

(Errors detected by SMMS-i outdoor interface - typical examples)

IPDU: Intelligent Power Drive Unit (Inverter P.C. board)
○ : Lighting, ◎ : Flashing, ● : Goes off
ALT.: Flashing is alternately when there are two flashing LED
SIM: Simultaneous flashing when there are two flashing LED

Check code			Display of receiving unit				Typical fault site	Description of error
Outdoor 7-segment display		TCC-LINK central control or wired remote control display	Indicator light block					
	Sub-code		Operation	Timer	Ready	Flash		
E06	Number of indoor units from which signal is received normally	E06	●	●	◎		Dropping out of indoor unit	Indoor unit initially communicating normally fails to return signal (reduction in number of indoor units connected).
E07	–	(E04)	●	●	◎		Indoor-outdoor communication circuit error	Signal cannot be transmitted to indoor units (→ indoor units left without communication from outdoor unit).
E08	Duplicated indoor address	(E08)	◎	●	●		Duplicated indoor address	More than one indoor unit is assigned same address (also detected at indoor unit end).
E12	01: Indoor-outdoor communication 02: Outdoor-outdoor communication	E12	◎	●	●		Automatic address starting error	• Indoor automatic address setting is started while automatic address setting for equipment in other refrigerant line is in progress. • Outdoor automatic address setting is started while automatic address setting for indoor units is in progress.
E15	–	E15	●	●	◎		Indoor unit not found during automatic address setting	Indoor unit fails to communicate while automatic address setting for indoor units is in progress.
E16	00: Overloading 01: Number of units connected	E16	●	●	◎		Too many indoor units connected/overloading	Combined capacity of indoor units is too large (more than 125 % of combined capacity of outdoor units).
E19	00: No header unit 02: Two or more header units	E19	●	●	◎		Error in number of outdoor header units	There is no or more than one outdoor header unit in one refrigerant line.
E20	01: Connection of outdoor unit from other refrigerant line 02: Connection of indoor unit from other refrigerant line	E20	●	●	◎		Connection to other refrigerant line found during automatic address setting	Indoor unit from other refrigerant line is detected while indoor automatic address setting is in progress.
E23	–	E23	●	●	◎		Outdoor-outdoor communication transmission error	Signal cannot be transmitted to other outdoor units.
E25	–	E25	●	●	◎		Duplicated follower outdoor address	There is duplication in outdoor addresses set manually.
E26	Address of outdoor unit from which signal is not received normally	E26	●	●	◎		Dropping out of outdoor unit	Follower outdoor unit initially communicating normally fails to do so (reduction in number of follower outdoor units connected).
E28	Detected outdoor unit No.	E28	●	●	◎		Outdoor follower unit error	Outdoor header unit detects fault relating to follower outdoor unit (detail displayed on follower outdoor unit).
E31		E31	●	●	◎		IPDU communication error	There is no communication between IPDUs (P.C. boards) in inverter box.
F04	–	F04	◎	◎	○	ALT	Outdoor discharge temperature sensor (TD1) error	Outdoor discharge temperature sensor (TD1) has been open/short-circuited.
F05	–	F05	◎	◎	○	ALT	Outdoor discharge temperature sensor (TD2) error	Outdoor discharge temperature sensor (TD2) has been open/short-circuited.
F06	01: TE1 02: TE2	F06	◎	◎	○	ALT	Outdoor heat exchanger temperature sensor (TE1, TE2) error	Outdoor heat exchanger temperature sensors (TE1, TE2) have been open/short-circuited.
F07	–	F07	◎	◎	○	ALT	Outdoor liquid temperature sensor (TL) error	Outdoor liquid temperature sensor (TL) has been open/short-circuited.
F08	–	F08	◎	◎	○	ALT	Outdoor outside air temperature sensor (TO) has been open/short-circuited.	Outdoor outside air temperature sensor (TO) has been open/short-circuited.
F11	–	F11						

	A3-IPDU 1	A3-IPDU 2	A3-IPDU 3	Fan IPDU		A3-IPDU 1	A3-IPDU 2	A3-IPDU 3	Fan IPDU
01	O				0A		O		O
02		O			0B	O	O		O
03	O	O			0C			O	O
04			O		0D	O		O	O
05	O		O		0E		O	O	O
06		O	O		0F	O	O	O	O
07	O	O	O		Circle (O): Faulty IPDU				
08				O					
09	O			O					

Check code			Display of receiving unit				Typical fault site	Description of error
Outdoor 7-segment display		TCC-LINK central control or wired remote control display	Indicator light block					
	Sub-code		Operation	Timer	Ready	Flash		
F12	–	F12	◎	◎	○	ALT	Outdoor suction temperature sensor (TS1) error	Outdoor suction temperature sensor (TS1) has been open/short-circuited.
F15	–	F15	◎	◎	○	ALT	Outdoor temperature sensor (TE1, TL) wiring error	Wiring error in outdoor temperature sensors (TE1, TL) has been detected.
F16	–	F16	◎	◎	○	ALT	Outdoor pressure sensor (Pd, Ps) wiring error	Wiring error in outdoor pressure sensors (Pd, Ps) has been detected.
F22	–	F22	◎	◎	○	ALT	Outdoor discharge temperature sensor (TD3) error	Outdoor discharge temperature sensor (TD3) has been open/short-circuited.
F23	–	F23	◎	◎	○	ALT	Low pressure sensor (Ps) error	Output voltage of low pressure sensor (Ps) is zero.
F24	–	F24	◎	◎	○	ALT	High pressure sensor (Pd) error	Output voltage of high pressure sensor (Pd) is zero or provides abnormal readings when compressors have been turned off.
F31	–	F31	◎	◎	○	SIM	Outdoor EEPROM error	Outdoor EEPROM is faulty (alarm and shutdown for header unit and continued operation for follower unit)
H05	–	H05	●	◎	●		Outdoor discharge temperature sensor (TD1) wiring error	Wiring/installation error or detachment of outdoor discharge temperature sensor (TD1) has been detected.
H06	–	H06	●	◎	●		Activation of low-pressure protection	Low pressure (Ps) sensor detects abnormally low operating pressure.
H07	–	H07	●	◎	●		Low oil level protection	Temperature sensor for oil level detection (TK1-5) detects abnormally low oil level.
H08	01: TK1 sensor error 02: TK2 sensor error 03: TK3 sensor error 04: TK4 sensor error 05: TK5 sensor error	H08	●	◎	●		Error in temperature sensor for oil level detection (TK1-5)	Temperature sensor for oil level detection (TK1-5) has been open/short-circuited.
H15	–	H15	●	◎	●		Outdoor discharge temperature sensor (TD2) wiring error	Wiring/installation error or detachment of outdoor discharge temperature sensor (TD2) has been detected.
H16	01: TK1 oil circuit error 02: TK2 oil circuit error 03: TK3 oil circuit error 04: TK4 oil circuit error 05: TK5 oil circuit error	H16	●	◎	●		Oil level detection circuit error	No temperature change is detected by temperature sensor for oil level detection (TK1-5) despite compressor having been started.
H25	–	H25	●	◎	●		Outdoor discharge temperature sensor (TD3) wiring error	Wiring/installation error or detachment of outdoor discharge temperature sensor (TD3) has been detected.
L04	–	L04	◎	○	◎	SIM	Duplicated outdoor refrigerant line address	Identical refrigerant line address has been assigned to outdoor units belonging to different refrigerant piping systems.
L06	Number of priority indoor units (check code L05 or L06 depending on individual unit)	L05	◎	●	◎	SIM	Duplicated priority indoor unit (as displayed on priority indoor unit)	More than one indoor unit has been set up as priority indoor unit.
		L06	◎	●	◎	SIM	Duplicated priority indoor unit (as displayed on indoor unit other than priority indoor unit)	More than one indoor unit has been set up as priority indoor unit.
L08	–	(L08)	◎	●	◎	SIM	Indoor group address not set	Address setting has not been performed for one or more indoor units (also detected at indoor end).
L10	–	L10	◎	○	◎	SIM	Outdoor capacity not set	Outdoor unit capacity has not been set (after P.C. board replacement).
L17	–	L17	◎	○	◎	SIM	Outdoor model incompatibility error	Old model outdoor unit (prior to 3 series) has been connected.
L18	–	L18	◎	○	◎	SIM	Cooling/heating selection unit error	Cooling/heating cycle error resulting from piping error is detected.
L28	–	L28	◎	○	◎	SIM	Too many outdoor units connected	More than four outdoor units have been connected.

Check code			Display of receiving unit				Typical fault site	Description of error
Outdoor 7-segment display		TCC-LINK central control or wired remote control display	Indicator light block					
	Sub-code		Operation	Timer	Ready	Flash		
L29	<table><tr><th></th><th>A3-IPDU 1</th><th>A3-IPDU 2</th><th>A3-IPDU 3</th><th>Fan IPDU</th><th></th><th>A3-IPDU 1</th><th>A3-IPDU 2</th><th>A3-IPDU 3</th><th>Fan IPDU</th></tr><tr><td>01</td><td>O</td><td></td><td></td><td></td><td>0A</td><td></td><td>O</td><td></td><td>O</td></tr><tr><td>02</td><td></td><td>O</td><td></td><td></td><td>0B</td><td>O</td><td>O</td><td></td><td>O</td></tr><tr><td>03</td><td>O</td><td>O</td><td></td><td></td><td>0C</td><td></td><td></td><td>O</td><td>O</td></tr><tr><td>04</td><td></td><td></td><td>O</td><td></td><td>0D</td><td>O</td><td></td><td>O</td><td>O</td></tr><tr><td>05</td><td>O</td><td></td><td>O</td><td></td><td>0E</td><td></td><td>O</td><td>O</td><td>O</td></tr><tr><td>06</td><td></td><td>O</td><td>O</td><td></td><td>0F</td><td>O</td><td>O</td><td>O</td><td>O</td></tr><tr><td>07</td><td>O</td><td>O</td><td>O</td><td></td><td colspan="5" rowspan="3">Circle (O): Faulty IPDU</td></tr><tr><td>08</td><td></td><td></td><td></td><td>O</td></tr><tr><td>09</td><td>O</td><td></td><td></td><td>O</td></tr></table>	L29	◎	○	◎	SIM	Error in number of IPDUs	There are insufficient number of IPDUs (P.C. boards) in inverter box.
L30	Detected indoor unit No.	(L30)	◎	○	◎	SIM	Indoor external error input (interlock)	Indoor unit has been shut down for external error input in one refrigerant line (detected by indoor unit).
P03	–	P03	◎	●	◎	ALT	Outdoor discharge (TD1) temperature error	Outdoor discharge temperature sensor (TD1) has detected abnormally high temperature.
P05	00: Open phase detected	P05	◎	●	◎	ALT	Open phase/power failure	Open phase is detected when power is turned on. Inverter DC voltage is too high (overvoltage) or too low (undervoltage).
	01: Compressor 1 02: Compressor 2 03: Compressor 3						Inverter DC voltage (Vdc) error MG-CTT error	
P07	01: Compressor 1 02: Compressor 2 03: Compressor 3	P07	◎	●	◎	ALT	Heat sink overheating error	Temperature sensor built into IGBT (TH) detects overheating.
P10	Indoor unit No. detected	(P10)	●	◎	◎	ALT	Indoor unit overflow	Indoor unit has been shutdown in one refrigerant line due to detection of overflow (detected by indoor unit).
P13	–	P13	●	◎	◎	ALT	Outdoor liquid backflow detection error	State of refrigerant cycle circuit indicates liquid backflow operation.
P15	01: TS condition 02: TD condition	P15	◎	●	◎	ALT	Gas leak detection	Outdoor suction temperature sensor (TS1) detects sustained and repeated high temperatures that exceed standard value.
P17	–	P17	◎	●	◎	ALT	Outdoor discharge (TD2) temperature error	Outdoor discharge temperature sensor (TD2) detects abnormally high temperature.
P18	–	P18	◎	●	◎	ALT	Outdoor discharge (TD3) temperature error	Outdoor discharge temperature sensor (TD3) detects abnormally high temperature.
P19	Outdoor unit No. detected	P19	◎	●	◎	ALT	4-way valve reversing error	Abnormality in refrigerating cycle is detected during heating operation.
P20	–	P20	◎	●	◎	ALT	Activation of high-pressure protection	High pressure (Pd) sensor detects high pressure that exceeds standard value.

MG-CTT: Magnet contactor

Check code			Display of receiving unit				Typical fault site	Description of error
Outdoor 7-segment display		TCC-LINK central control or wired remote control display	Indicator light block					
	Sub-code		Operation	Timer	Ready	Flash		
F13	01: Compressor 1 02: Compressor 2 03: Compressor 3	F13	◎	◎	○	ALT	Error in temperature sensor built into indoor IGBT (TH)	Temperature sensor built into indoor IGBT (TH) has been open/short-circuited.
H01	01: Compressor 1 02: Compressor 2 03: Compressor 3	H01	●	◎	●		Compressor breakdown	Inverter current (Idc) detection circuit detects overcurrent.
H02	01: Compressor 1 02: Compressor 2 03: Compressor 3	H02	●	◎	●		Compressor error (lockup)	Compressor lockup is detected
H03	01: Compressor 1 02: Compressor 2 03: Compressor 3	H03	●	◎	●		Current detection circuit error	Abnormal current is detected while inverter compressor is turned off.
P04	01: Compressor 1 02: Compressor 2 03: Compressor 3	P04	◎	●	◎	ALT	Activation of high-pressure SW	High-pressure SW is activated.
P07	01: Compressor 1 02: Compressor 2 03: Compressor 3	P07	◎	●	◎	ALT	Heat sink overheating error	Temperature sensor built into IGBT (TH) detects overheating.
P22	0∗: IGBT circuit 1∗: Position detection circuit error 3∗: Motor lockup error 4∗: Motor current detection C∗: TH sensor error D∗: TH sensor error E∗: Inverter DC voltage error (outdoor fan) Note: Although letters 0 to F appear at locations indicated by “∗”, please ignore them.	P22	◎	●	◎	ALT	Outdoor fan IPDU error	Outdoor fan IPDU detects error.
P26	01: Compressor 1 02: Compressor 2 03: Compressor 3	P26	◎	●	◎	ALT	Activation of G-Tr (IGBT) short-circuit protection	Short-circuit protection for compressor motor driver circuit components is activated (momentary overcurrent).
P29	01: Compressor 1 02: Compressor 2 03: Compressor 3	P29	◎	●	◎	ALT	Compressor position detection circuit error	Compressor motor position detection error is detected.

Note: The above check codes are examples only, and different check codes may be displayed depending on the outdoor unit configuration (e.g. a Super heat recovery multi system). For details, see the service manual for the outdoor unit.

9-3. Troubleshooting based on information displayed on remote control

Using main remote control (RBC-AMT32UL)

(1) Checking and testing

When a fault occurs to an air conditioner, a check code and indoor unit No. are displayed on the display window of the remote control.
Check codes are only displayed while the air conditioner is in operation.
If the display has already disappeared, access error history by following the procedure described below.

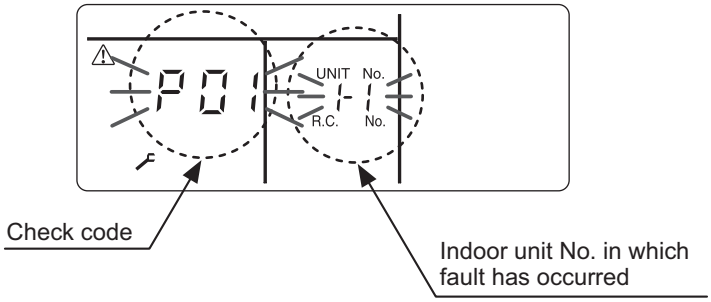

(2) Error history

The error history access procedure is described below (up to four errors stored in memory).
Error history can be accessed regardless of whether the air conditioner is in operation or shut down.

<Procedure> To be performed when system at rest

1 **Invoke the SERVICE CHECK mode by pressing the TEST + SET buttons simultaneously and holding for at least 4 seconds.**
The letters " SERVICE CHECK" light up, and the check code "01" is displayed, indicating the error history. This is accompanied by the indoor unit No. to which the error history is related and a check code.

2 **To check other error history items, press the TEMP. button to select another check code.**
Check code "01" (latest) → Check code "04" (oldest)
Note: Error history contains four items.

3 **When the TEST button is pushed, normal display is restored.**

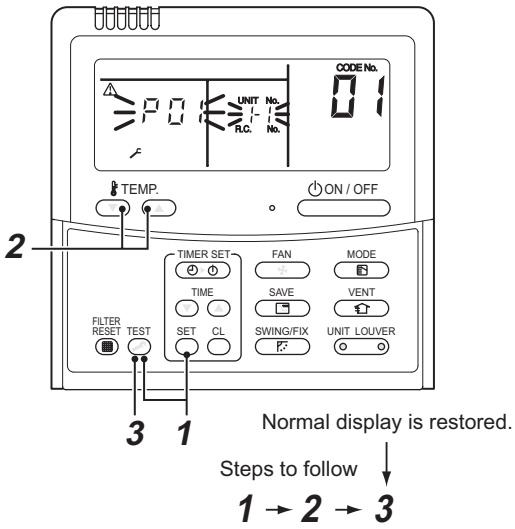

REQUIREMENT

Do not push the CL button as it would erase the whole error history of the indoor unit.

How to read displayed information

<7-segment display symbols>

<Corresponding alphanumerical letters>

0 1 2 3 4 5 6 7 8 9 A b C d E F H J L P

Using indoor unit indicators (receiving unit light block) (wireless type)

To identify the check code, check the 7-segment display on the header unit. To check for check codes not displayed on the 7-segment display, consult the “List of Check Codes (Indoor Unit)” in “9-2. Troubleshooting method”.

●: Goes off ○: Lighting ☼: Blinking (0.5 seconds)

Light block	Check code	Cause of fault		
Operation ● Timer ● Ready ● All lights out	–	Power turned off or error in wiring between receiving and indoor units		
Operation ☼ Timer ● Ready ● Blinking	E01	Faulty reception	Receiving unit	Error or poor contact in wiring between receiving and indoor units
	E02	Faulty transmission		
	E03	Loss of communication		
	E08	Duplicated indoor unit No. (address)		Setting error
	E09	Duplicated master remote control		
	E10	Indoor unit inter-MCU communication error		
	E12	Automatic address starting error		
	E18	Error or poor contact in wiring between indoor units, indoor power turned off		
Operation ● Timer ● Ready ☼ Blinking	E04	Error or poor contact in wiring between indoor and outdoor units (loss of indoor-outdoor communication)		
	E06	Faulty reception in indoor-outdoor communication (dropping out of indoor unit)		
	E07	Faulty transmission in indoor-outdoor communication		
	E15	Indoor unit not found during automatic address setting		
	E16	Too many indoor units connected/overloading		
	E19	Error in number of outdoor header units		
	E20	Detection of refrigerant piping communication error during automatic address setting		
	E23	Faulty transmission in outdoor-outdoor communication		
	E25	Duplicated follower outdoor address		
	E26	Faulty reception in outdoor-outdoor communication, dropping out of outdoor unit		
	E28	Outdoor follower unit error		
	E31	IPDU communication error		
Operation ● Timer ☼ Ready ☼ Alternate blinking	P01	Indoor AC fan error		
	P10	Indoor overflow error		
	P12	Indoor DC fan error		
	P13	Outdoor liquid backflow detection error		
Operation ☼ Timer ● Ready ☼ Alternate blinking	P03	Outdoor discharge (TD1) temperature error		
	P04	Activation of outdoor high-pressure SW		
	P05	Open phase/power failure Inverter DC voltage (Vdc) error MG-CTT error		
	P07	Outdoor heat sink overheating error - Poor cooling of electrical component (IGBT) of outdoor unit		
	P15	Gas leak detection - insufficient refrigerant charging		
	P17	Outdoor discharge (TD2) temperature error		
	P18	Outdoor discharge (TD3) temperature error		
	P19	Outdoor 4-way valve reversing error		
	P20	Activation of high-pressure protection		
	P22	Outdoor fan IPDU error		
	P26	Outdoor G-Tr short-circuit error		
	P29	Compressor position detection circuit error		
	P31	Shutdown of other indoor unit in group due to fault (group follower unit error)		

MG-CTT: Magnet contactor

Light block	Check code	Cause of fault	
Operation Timer Ready Alternate blinking	F01	Heat exchanger temperature sensor (TCJ) error	Indoor unit temperature sensor errors
	F02	Heat exchanger temperature sensor (TC2) error	
	F03	Heat exchanger temperature sensor (TC1) error	
	F10	Ambient temperature sensor (TA) error	
	F11	Discharge temperature sensor (TF) error	
Operation Timer Ready Alternate blinking	F04	Discharge temperature sensor (TD1) error	Outdoor unit temperature sensor errors
	F05	Discharge temperature sensor (TD2) error	
	F06	Heat exchanger temperature sensor (TE1, TE2) error	
	F07	Liquid temperature sensor (TL) error	
	F08	Outside air temperature sensor (TO) error	
	F12	Suction temperature sensor (TS1) error	
	F13	Heat sink sensor (TH) error	
	F15	Wiring error in heat exchanger sensor (TE1) and liquid temperature sensor (TL) Outdoor unit temperature sensor wiring/installation error	
	F16	Wiring error in outdoor high pressure sensor (Pd) and low pressure sensor (Ps) Outdoor pressure sensor wiring error	
	F22	Outdoor discharge temperature sensor (TD3) error	
	F23	Low pressure sensor (Ps) error	Outdoor unit pressure sensor errors
	F24	High pressure sensor (Pd) error	
Operation Timer Ready Synchronized blinking	F29	Fault in indoor EEPROM	
Operation Timer Ready Blinking	H01	Compressor breakdown	Outdoor unit compressor-related errors
	H02	Compressor lockup	
	H03	Current detection circuit error	
	H05	Wiring/installation error or detachment of outdoor discharge temperature sensor (TD1)	
	H06	Abnormal drop in low-pressure sensor (Ps) reading	Protective shutdown of outdoor unit
	H07	Abnormal drop in oil level	
	H08	Error in temperature sensor for oil level detection circuit (TK1, TK2, TK3, TK4 or TK5)	
	H15	Wiring/installation error or detachment of outdoor discharge temperature sensor (TD2)	
	H16	Oil level detection circuit error - Error in outdoor unit TK1, TK2, TK3, TK4 or TK5 circuit	
	H25	Wiring/installation error or detachment of outdoor discharge temperature sensor (TD3)	
Operation Timer Ready Synchronized blinking	L03	Duplicated indoor group header unit	
	L05	Duplicated priority indoor unit (as displayed on priority indoor unit)	
	L06	Duplicated priority indoor unit (as displayed on indoor unit other than priority indoor unit)	
	L07	Connection of group control cable to stand-alone indoor unit	
	L08	Indoor group address not set	
	L09	Indoor capacity not set	
Operation Timer Ready Synchronized blinking	L04	Duplicated outdoor refrigerant line address	
	L10	Outdoor capacity not set	
	L17	Outdoor model incompatibility error	
	L18	Flow selector units error	
	L20	Duplicated central control address	
	L28	Too many outdoor units connected	
	L29	Error in number of IPDUs	
	L30	Indoor external interlock error	

Light block	Check code	Cause of fault
Operation Timer Ready Synchronized blinking	F31	Outdoor EEPROM error

Other (indications not involving check code)

Light block	Check code	Cause of fault
Operation Timer Ready Synchronized blinking	–	Test run in progress
Operation Timer Ready Alternate blinking	–	Setting incompatibility (automatic cooling/heating setting for model incapable of it and heating setting for cooling-only model)

9-4. Check codes displayed on remote control and SMMS-i outdoor unit (7-segment display on I/F board) and locations to be checked

For other types of outdoor units, refer to their own service manuals.

Check code			Location of detection	Description	System status	Error detection condition(s)	Check items (locations)
Wired remote control	Outdoor 7-segment display						
	Check code	Sub-code					
E01	–	–	Remote control	Indoor-remote control communication error (detected at remote control end)	Stop of corresponding unit	Communication between indoor P.C. board and remote control is disrupted.	• Check remote control inter-unit tie cable (A/B). • Check for broken wire or connector bad contact. • Check indoor power supply. • Check for defect in indoor P.C. board. • Check remote control address settings (when two remote controls are in use). • Check remote control P.C. board.
E02	–	–	Remote control	Remote control transmission error	Stop of corresponding unit	Signal cannot be transmitted from remote control to indoor unit.	• Check internal transmission circuit of remote control. --- Replace remote control as necessary.
E03	–	–	Indoor unit	Indoor-remote control communication error (detected at indoor end)	Stop of corresponding unit	There is no communication from remote control (including wireless) or “1:1 Model” Connection Interface.	• Check remote control and “1:1 Model” Connection Interface wiring.
E04	–	–	Indoor unit	Indoor-outdoor communication circuit error (detected at indoor end)	Stop of corresponding unit	Indoor unit is not receiving signal from outdoor unit.	• Check order in which power was turned on for indoor and outdoor units. • Check indoor address setting. • Check indoor-outdoor tie cable. • Check outdoor termination resistance setting (SW30, Bit 2).
E06	E06	No. of indoor units from which signal is received normally	I/F	Dropping out of indoor unit	All stop	Indoor unit initially communicating normally fails to return signal for specified length of time.	• Check power supply to indoor unit. (Is power turned on?) • Check connection of indoor-outdoor communication cable. • Check connection of communication connectors on indoor P.C. board. • Check connection of communication connectors on outdoor P.C. board. • Check for defect in indoor P.C. board. • Check for defect in outdoor P.C. board (I/F).
–	E07	–	I/F	Indoor-outdoor communication circuit error (detected at outdoor end)	All stop	Signal cannot be transmitted from outdoor to indoor units for 30 seconds continuously.	• Check outdoor termination resistance setting (SW30, Bit 2). • Check connection of indoor-outdoor communication circuit.
E08	E08	Duplicated indoor address	Indoor unit I/F	Duplicated indoor address	All stop	More than one indoor unit is assigned same address.	• Check indoor addresses. • Check for any change made to remote controller connection (group/individual) since indoor address setting.
E09	–	–	Remote control	Duplicated master remote control	Stop of corresponding unit	In two remote control configuration (including wireless), both controllers are set up as master. (Header indoor unit is shut down with alarm, while follower indoor units continue operating.)	• Check remote control settings. • Check remote control P.C. boards.
E10	–	–	Indoor unit	Indoor inter-MCU communication error	Stop of corresponding unit	Communication cannot be established/maintained upon turning on of power or during communication.	• Check for defect in indoor P.C. board

Check code			Location of detection	Description	System status	Error detection condition(s)	Check items (locations)
Wired remote control	Outdoor 7-segment display						
	Check code	Sub-code					
E12	E12	01: Indoor-outdoor communication 02: Outdoor-outdoor communication	I/F	Automatic address starting error	All stop	• Indoor automatic address setting is started while automatic address setting for equipment in other refrigerant line is in progress. • Outdoor automatic address setting is started while automatic address setting for indoor units is in progress.	• Perform automatic address setting again after disconnecting communication cable to that refrigerant line.
E15	E15	–	I/F	Indoor unit not found during automatic address setting	All stop	Indoor unit cannot be detected after indoor automatic address setting is started.	• Check connection of indoor-outdoor communication line. • Check for error in indoor power supply system. • Check for noise from other devices. • Check for power failure. • Check for defect in indoor P.C. board.
E16	E16	00: Overloading 01-: No. of units connected	I/F	Too many indoor units connected	All stop	• Combined capacity of indoor units exceeds 125 % of combined capacity of outdoor units. **Note:** **If this code comes up after backup setting for outdoor unit failure is performed, perform "No overloading detected" setting.** <"No overloading detected" setting method> Turn on SW09/Bit 2 on I/F P.C. board of outdoor header unit. • More than 48 indoor units are connected.	• Check capacities of indoor units connected. • Check combined HP capacities of indoor units. • Check HP capacity settings of outdoor units. • Check No. of indoor units connected. • Check for defect in outdoor P.C. board (I/F).
E18	–	–	Indoor unit	Error in communication between indoor header and follower units	Stop of corresponding unit	Periodic communication between indoor header and follower units cannot be maintained.	• Check remote control wiring. • Check indoor power supply wiring. • Check P.C. boards of indoor units.
E19	E19	00: No header unit 02: Two or more header units	I/F	Error in number of outdoor header units	All stop	• There is more than one outdoor header unit in one line. • There is no outdoor header unit in one line.	Outdoor header unit is outdoor unit to which indoor-outdoor tie cable (U1,U2) is connected. • Check connection of indoor-outdoor communication line. • Check for defect in outdoor P.C. board (I/F).
E20	E20	01: Connection of outdoor unit from other line 02: Connection of indoor unit from other line	I/F	Connection to other line found during automatic address setting	All stop	Equipment from other line is found to have been connected when indoor automatic address setting is in progress.	Disconnect inter-line tie cable in accordance with automatic address setting method explained in "Address setting" section.
E23	E23	–	I/F	Outdoor-outdoor communication transmission error	All stop	Signal cannot be transmitted to other outdoor units for at least 30 seconds continuously.	• Check power supply to outdoor units. (Is power turned on?) • Check connection of tie cables between outdoor units for bad contact or broken wire. • Check communication connectors on outdoor P.C. boards. • Check for defect in outdoor P.C. board (I/F). • Check termination resistance setting for communication between outdoor units.
E25	E25	–	I/F	Duplicated follower outdoor address	All stop	There is duplication in outdoor addresses set manually.	**Note:** **Do not set outdoor addresses manually.**

<table>
<tr><th colspan="3">Check code</th><th rowspan="3">Location of detection</th><th rowspan="3">Description</th><th rowspan="3">System status</th><th rowspan="3">Error detection condition(s)</th><th rowspan="3">Check items (locations)</th></tr>
<tr><th rowspan="2">Wired remote control</th><th colspan="2">Outdoor 7-segment display</th></tr>
<tr><th>Check code</th><th>Sub-code</th></tr>
<tr><td>E26</td><td>E26</td><td>Address of outdoor unit from which signal is not received normally</td><td>I/F</td><td>Dropping out of outdoor unit</td><td>All stop</td><td>Outdoor unit initially communicating normally fails to return signal for specified length of time.</td><td>• Backup setting is being used for outdoor units.
• Check power supply to outdoor unit. (Is power turned on?)
• Check connection of tie cables between outdoor units for bad contact or broken wire.
• Check communication connectors on outdoor P.C. boards.
• Check for defect in outdoor P.C. board (I/F).</td></tr>
<tr><td>E28</td><td>E28</td><td>Detected outdoor unit No.</td><td>I/F</td><td>Outdoor follower unit error</td><td>All stop</td><td>Outdoor header unit receives error code from outdoor follower unit.</td><td>• Check check code displayed on outdoor follower unit.
<Convenient functions>
If SW04 is pressed and held for at least 1 second while [E28] is displayed on the 7-segmentdisplay of outdoor header unit, the fan of the outdoor unit that has been shut down due to an error comes on.
If SW04 and SW05 are pressed simultaneously, the fans of normal outdoor units come on.
To stop the fan or fans, press SW05 on its own.</td></tr>
<tr><td>E31</td><td>E31</td><td><table><tr><th></th><th colspan="3">A3-IPDU</th><th>Fan</th></tr><tr><th></th><th>1</th><th>2</th><th>3</th><th>IPDU</th></tr><tr><td>01</td><td>O</td><td></td><td></td><td></td></tr><tr><td>02</td><td></td><td>O</td><td></td><td></td></tr><tr><td>03</td><td>O</td><td>O</td><td></td><td></td></tr><tr><td>04</td><td></td><td></td><td>O</td><td></td></tr><tr><td>05</td><td>O</td><td></td><td>O</td><td></td></tr><tr><td>06</td><td></td><td>O</td><td>O</td><td></td></tr><tr><td>07</td><td>O</td><td>O</td><td>O</td><td></td></tr><tr><td>08</td><td></td><td></td><td></td><td>O</td></tr><tr><td>09</td><td>O</td><td></td><td></td><td>O</td></tr><tr><td>0A</td><td></td><td>O</td><td></td><td>O</td></tr><tr><td>0B</td><td>O</td><td>O</td><td></td><td>O</td></tr><tr><td>0C</td><td></td><td></td><td>O</td><td>O</td></tr><tr><td>0D</td><td>O</td><td></td><td>O</td><td>O</td></tr><tr><td>0E</td><td></td><td>O</td><td>O</td><td>O</td></tr><tr><td>0F</td><td>O</td><td>O</td><td>O</td><td>O</td></tr></table>Symbol O signifies site of IPDU error.</td><td>I/F</td><td>IPDU communication error</td><td>All stop</td><td>Communication is disrupted between IPDUs (P.C. boards) in inverter box.</td><td>• Check wiring and connectors involved in communication between IPDU-I/F P.C. board for bad contact or broken wire.
• Check for defect in outdoor P.C. board (I/F, A3-IPDU or Fan IPDU).
• Check for external noise.</td></tr>
<tr><td>F01</td><td>–</td><td>–</td><td>Indoor unit</td><td>Indoor TCJ sensor error</td><td>Stop of corresponding unit</td><td>Sensor resistance is infinity or zero (open/short circuit).</td><td>• Check connection of TCJ sensor connector and wiring.
• Check resistance characteristics of TCJ sensor.
• Check for defect in indoor P.C. board.</td></tr>
<tr><td>F02</td><td>–</td><td>–</td><td>Indoor unit</td><td>Indoor TC2 sensor error</td><td>Stop of corresponding unit</td><td>Sensor resistance is infinity or zero (open/short circuit).</td><td>• Check connection of TC2 sensor connector and wiring.
• Check resistance characteristics of TC2 sensor.
• Check for defect in indoor P.C. board.</td></tr>
<tr><td>F03</td><td>–</td><td>–</td><td>Indoor unit</td><td>Indoor TC1 sensor error</td><td>Stop of corresponding unit</td><td>Sensor resistance is infinity or zero (open/short circuit).</td><td>• Check connection of TC1 sensor connector and wiring.
• Check resistance characteristics of TC1 sensor.
• Check for defect in indoor P.C. board.</td></tr>
<tr><td>F04</td><td>F04</td><td>–</td><td>I/F</td><td>TD1 sensor error</td><td>All stop</td><td>Sensor resistance is infinity or zero (open/short circuit).</td><td>• Check connection of TD1 sensor connector.
• Check resistance characteristics of TD1 sensor.
• Check for defect in outdoor P.C. board (I/F).</td></tr>
</table>

Check code			Location of detection	Description	System status	Error detection condition(s)	Check items (locations)
Wired remote control	Outdoor 7-segment display						
	Check code	Sub-code					
F05	F05	–	I/F	TD2 sensor error	All stop	Sensor resistance is infinity or zero (open/short circuit).	• Check connection of TD2 sensor connector. • Check resistance characteristics of TD2 sensor. • Check for defect in outdoor P.C. board (I/F).
F06	F06	01: TE1 sensor error 02: TE2 sensor error	I/F	TE1/TE2 sensor error	All stop	Sensor resistance is infinity or zero (open/short circuit).	• Check connection of TE1/TE2 sensor connectors. • Check resistance characteristics of TE1/TE2 sensors. • Check for defect in outdoor P.C. board (I/F).
F07	F07	–	I/F	TL sensor error	All stop	Sensor resistance is infinity or zero (open/short circuit).	• Check connection of TL sensor connector. • Check resistance characteristics of TL sensor. • Check for defect in outdoor P.C. board (I/F).
F08	F08	–	I/F	TO sensor error	All stop	Sensor resistance is infinity or zero (open/short circuit).	• Check connection of TO sensor connector. • Check resistance characteristics of TO sensor. • Check for defect in outdoor P.C. board (I/F).
F10	–	–	Indoor unit	Indoor TA sensor error	Stop of corresponding unit	Sensor resistance is infinity or zero (open/short circuit).	• Check connection of TA sensor connector and wiring. • Check resistance characteristics of TA sensor. • Check for defect in indoor P.C. board.
F11	–	–	Indoor unit	Indoor TF sensor error	Stop of corresponding unit	Sensor resistance is infinity or zero (open/short circuit).	• Check connection of TF sensor connector and wiring. • Check resistance characteristics of TF sensor. • Check for defect in indoor P.C. board.
F12	F12	–	I/F	TS1 sensor error	All stop	Sensor resistance is infinity or zero (open/short circuit).	• Check connection of TS1 sensor connector. • Check resistance characteristics of TS1 sensor. • Check for defect in outdoor P.C. board (I/F).
F13	F13	01: Compressor 1 side 02: Compressor 2 side 03: Compressor 3 side	IPDU	TH sensor error	All stop	Sensor resistance is infinity or zero (open/short circuit).	• Defect in IGBT built-in temperature sensor → Replace A3-IPDU P.C. board.
F15	F15	–	I/F	Outdoor temperature sensor wiring error (TE1, TL)	All stop	During compressor operation in HEAT mode, TE1 continuously provides temperature reading higher than indicated by TL by at least specified margin for 3 minutes or more.	• Check installation of TE1 and TL sensors. • Check resistance characteristics of TE1 and TL sensors. • Check for outdoor P.C. board (I/F) error.
F16	F16	–	I/F	Outdoor pressure sensor wiring error (Pd, Ps)	All stop	Readings of high-pressure Pd sensor and low-pressure Ps sensor are switched. Output voltages of both sensors are zero.	• Check connection of high-pressure Pd sensor connector. • Check connection of low-pressure Ps sensor connector. • Check for defect in pressure sensors Pd and Ps. • Check for error in outdoor P.C. board (I/F). • Check for deficiency in compressive output of compressor.
F22	F22	–	I/F	TD3 sensor error	All stop	Sensor resistance is infinity or zero. (open/short circuit)	• Check connection of TD3 sensor connector. • Check resistance characteristics of TD3 sensor. • Check for defect in outdoor P.C. board (I/F).

Check code			Location of detection	Description	System status	Error detection condition(s)	Check items (locations)
Wired remote control	Outdoor 7-segment display						
	Check code	Sub-code					
F23	F23	–	I/F	Ps sensor error	All stop	Output voltage of Ps sensor is zero.	• Check for connection error involving Ps sensor and Pd sensor connectors. • Check connection of Ps sensor connector. • Check for defect in Ps sensor. • Check for deficiency in compressive output of compressor. • Check for defect in 4-way valve. • Check for defect in outdoor P.C. board (I/F). • Check for defect in SV4 circuit.
F24	F24	–	I/F	Pd sensor error	All stop	Output voltage of Pd sensor is zero (sensor open-circuited). Pd > 602 psi (4.15 MPa) despite compressor having been turned off.	• Check connection of Pd sensor connector. • Check for defect in Pd sensor. • Check for defect in outdoor P.C. board (I/F).
F29	–	–	Indoor unit	Other indoor error	Stop of corresponding unit	Indoor P.C. board does not operate normally.	• Check for defect in indoor P.C. board (faulty EEPROM)
F31	F31	–	I/F	Outdoor EEPROM error	All stop *1	Outdoor P.C. board (I/F) does not operate normally.	• Check power supply voltage. • Check power supply noise. • Check for defect in outdoor P.C. board (I/F).
H01	H01	01: Compressor 1 side 02: Compressor 2 side 03: Compressor 3 side	IPDU	Compressor breakdown	All stop	Inverter current detection circuit detects overcurrent and shuts system down.	• Check power supply voltage. (AC 208/230 V ± 10 %). • Check for defect in compressor. • Check for possible cause of abnormal overloading. • Check for defect in outdoor P.C. board (A3-IPDU).
H02	H02	01: Compressor 1 side 02: Compressor 2 side 03: Compressor 3 side	IPDU	Compressor error (lockup) MG-CTT error	All stop	Overcurrent is detected several seconds after startup of inverter compressor.	• Check for defect in compressor. • Check power supply voltage. (AC 208/230 V ± 10 %). • Check compressor system wiring, particularly for open phase. • Check connection of connectors/ terminals on A3-IPDU P.C. board. • Check conductivity of case heater. (Check for refrigerant entrapment inside compressor.) • Check for defect in outdoor P.C. board (A3-IPDU). • Check outdoor MG-CTT.
H03	H03	01: Compressor 1 side 02: Compressor 2 side 03: Compressor 3 side	IPDU	Current detection circuit error	All stop	Current flow of at least specified magnitude is detected despite inverter compressor having been shut turned off.	• Check current detection circuit wiring. • Check defect in outdoor P.C. board (A3-IPDU).
H05	H05	–	I/F	TD1 sensor miswiring (incomplete insertion)	All stop	Discharge temperature of compressor 1 (TD1) does not increase despite compressor being in operation.	• Check installation of TD1 sensor. • Check connection of TD1 sensor connector and wiring. • Check resistance characteristics of TD1 sensor. • Check for defect in outdoor P.C. board (I/F).

MG-CTT: Magnet contactor

*1 Total shutdown in case of header unit
Continued operation in case of follower unit

Check code			Location of detection	Description	System status	Error detection condition(s)	Check items (locations)
Wired remote control	Outdoor 7-segment display						
	Check code	Sub-code					
H06	H06	–	I/F	Activation of low-pressure protection	All stop	Low-pressure Ps sensor detects operating pressure lower than 0.02MPa.	• Check service valves to confirm full opening (both gas and liquid sides). • Check outdoor PMVs for clogging (PMV1, 2). • Check for defect in SV2 or SV4 circuits. • Check for defect in low-pressure Ps sensor. • Check indoor filter for clogging. • Check valve opening status of indoor PMV. • Check refrigerant piping for clogging. • Check operation of outdoor fan (during heating). • Check for insufficiency in refrigerant quantity.
H07	H07	–	I/F	Low oil level protection	All stop	Operating compressor detects continuous state of low oil level for about 2 hours.	<All outdoor units in corresponding line to be checked> • Check balance pipe service valve to confirm full opening. • Check connection and installation of TK1, TK2, TK3, TK4, and TK5 sensors. • Check resistance characteristics of TK1, TK2, TK3, TK4, and TK5 sensors. • Check for gas or oil leak in same line. • Check for refrigerant entrapment inside compressor casing. • Check SV3A, SV3B, SV3C, SV3D, SV3E, and SV3F valves for defect. • Check oil return circuit of oil separator for clogging. • Check oil equalizing circuit for clogging.
H08	H08	01: TK1 sensor error 02: TK2 sensor error 03: TK3 sensor error 04: TK4 sensor error 05: TK5 sensor error	I/F	Error in temperature sensor for oil level detection	All stop	Sensor resistance is infinity or zero (open/short circuit).	• Check connection of TK1 sensor connector. • Check resistance characteristics of TK1 sensor. • Check for defect in outdoor P.C. board (I/F).
					All stop	Sensor resistance is infinity or zero (open/short circuit).	• Check connection of TK2 sensor connector. • Check resistance characteristics of TK2 sensor. • Check for defect in outdoor P.C. board (I/F).
					All stop	Sensor resistance is infinity or zero (open/short circuit).	• Check connection of TK3 sensor connector. • Check resistance characteristics of TK3 sensor. • Check for defect in outdoor P.C. board (I/F).
					All stop	Sensor resistance is infinity or zero (open/short circuit).	• Check connection of TK4 sensor connector. • Check resistance characteristics of TK4 sensor. • Check for defect in outdoor P.C. board (I/F).
					All stop	Sensor resistance is infinity or zero (open/short circuit).	• Check connection of TK5 sensor connector. • Check resistance characteristics of TK5 sensor. • Check for defect in outdoor P.C. board (I/F).
H15	H15	–	I/F	TD2 sensor miswiring (incomplete insertion)	All stop	Air discharge temperature of (TD2) does not increase despite compressor 2 being in operation.	• Check installation of TD2 sensor. • Check connection of TD2 sensor connector and wiring. • Check resistance characteristics of TD2 sensor. • Check for defect in outdoor P.C. board (I/F).

Check code			Location of detection	Description	System status	Error detection condition(s)	Check items (locations)
Wired remote control	Outdoor 7-segment display						
	Check code	Sub-code					
H16	H16	01: TK1 oil circuit error 02: TK2 oil circuit error 03: TK3 oil circuit error 04: TK4 oil circuit error 05: TK5 oil circuit error	I/F	Oil level detection circuit error	All stop	No temperature change is detected by TK1 despite compressor 1 having been started.	• Check for disconnection of TK1 sensor. • Check resistance characteristics of TK1 sensor. • Check for connection error involving TK1, TK2, TK3, TK4, and TK5 sensors • Check for faulty operation in SV3E or SV3F valve. • Check for clogging in oil equalizing circuit capillary and faulty operation in check valve. • Check for refrigerant entrapment inside compressor.
						No temperature change is detected by TK2 despite compressor 2 having been started.	• Check for disconnection of TK2 sensor. • Check resistance characteristics of TK2 sensor. • Check for connection error involving TK1, TK2, TK3, TK4, and TK5 sensors • Check for faulty operation in SV3E or SV3F valve. • Check for clogging in oil equalizing circuit capillary and faulty operation in check valve. • Check for refrigerant entrapment inside compressor.
						No temperature change is detected by TK3 despite compressor 3 having been started.	• Check for disconnection of TK3 sensor. • Check resistance characteristics of TK3 sensor. • Check for connection error involving TK1, TK2, TK3, TK4, and TK5 sensors • Check for faulty operation in SV3E or SV3F valve. • Check for clogging in oil equalizing circuit capillary and faulty operation in check valve. • Check for refrigerant entrapment inside compressor.
						No temperature change is detected by TK4 despite compressor having been started.	• Check for disconnection of TK4 sensor. • Check resistance characteristics of TK4 sensor. • Check for connection error involving TK1, TK2, TK3, TK4, and TK5 sensors • Check for faulty operation in SV3E or SV3F valve. • Check for clogging in oil equalizing circuit capillary and faulty operation in check valve. • Check for refrigerant entrapment inside compressor.
						No temperature change is detected by TK5 despite compressor having been started.	• Check for disconnection of TK5 sensor. • Check resistance characteristics of TK5 sensor. • Check for connection error involving TK1, TK2, TK3, TK4, and TK5 sensors • Check for faulty operation in SV3E valve. • Check for clogging in oil equalizing circuit capillary and faulty operation in check valve. • Check for refrigerant entrapment inside compressor.
H25	H25	–	I/F	TD3 sensor miswiring (incomplete insertion)	All stop	Air discharge temperature (TD3) does not increase despite compressor 3 being in operation.	• Check installation of TD3 sensor. • Check connection of TD3 sensor connector and wiring. • Check resistance characteristics of TD3 sensor. • Check for defect in outdoor P.C. board (I/F).

Check code			Location of detection	Description	System status	Error detection condition(s)	Check items (locations)
Wired remote control	Outdoor 7-segment display						
	Check code	Sub-code					
L03	–	–	Indoor unit	Duplicated indoor header unit	Stop of corresponding unit	There is more than one header unit in group.	• Check indoor addresses. • Check for any change made to remote controller connection (group/individual) since indoor address setting.
L04	L04	–	I/F	Duplicated outdoor line address	All stop	There is duplication in line address setting for outdoor units belonging to different refrigerant piping systems.	• Check line addresses.
L05	–	–	I/F	Duplicated priority indoor unit (as displayed on priority indoor unit)	All stop	More than one indoor unit has been set up as priority indoor unit.	• Check display on priority indoor unit.
L06	L06	No. of priority indoor units	I/F	Duplicated priority indoor unit (as displayed on indoor unit other than priority indoor unit)	All stop	More than one indoor unit have been set up as priority indoor unit.	• Check displays on priority indoor unit and outdoor unit.
L07	–	–	Indoor unit	Connection of group control cable to stand-alone indoor unit	Stop of corresponding unit	There is at least one stand-alone indoor unit to which group control cable is connected.	• Check indoor addresses.
L08	L08	–	Indoor unit	Indoor group / addresses not set	Stop of corresponding unit	Address setting has not been performed for indoor units.	• Check indoor addresses. • This code is displayed when power is turned on for the first time after installation.
L09	–	–	Indoor unit	Indoor capacity not set	Stop of corresponding unit	Capacity setting has not been performed for indoor unit.	Set indoor capacity. (DN = 11)
L10	L10	–	I/F	Outdoor capacity not set	All stop	Jumper wire provided on P.C. board for servicing I/F P.C. board has not been removed as required for given model.	Check model setting of P.C. board for servicing outdoor I/F P.C. board.
L20	–	–	Indoor unit	Duplicated central control address	All stop	There is duplication in central control address setting.	• Check central control addresses.
L28	L28	–	I/F	Too many outdoor units connected	All stop	There are more than four outdoor units.	• Check No. of outdoor units connected (Only up to 4 units per system allowed). • Check communication lines between outdoor units. • Check for defect in outdoor P.C. board (I/F).
L29	L29	<table><tr><th></th><th colspan="3">A3-IPDU</th><th>Fan IPDU</th></tr><tr><th></th><th>1</th><th>2</th><th>3</th><th></th></tr><tr><td>01</td><td>O</td><td></td><td></td><td></td></tr><tr><td>02</td><td></td><td>O</td><td></td><td></td></tr><tr><td>03</td><td>O</td><td>O</td><td></td><td></td></tr><tr><td>04</td><td></td><td></td><td>O</td><td></td></tr><tr><td>05</td><td>O</td><td></td><td>O</td><td></td></tr><tr><td>06</td><td></td><td>O</td><td>O</td><td></td></tr><tr><td>07</td><td>O</td><td>O</td><td>O</td><td></td></tr><tr><td>08</td><td></td><td></td><td></td><td>O</td></tr><tr><td>09</td><td>O</td><td></td><td></td><td>O</td></tr><tr><td>0A</td><td></td><td>O</td><td></td><td>O</td></tr><tr><td>0B</td><td>O</td><td>O</td><td></td><td>O</td></tr><tr><td>0C</td><td></td><td></td><td>O</td><td>O</td></tr><tr><td>0D</td><td>O</td><td></td><td>O</td><td>O</td></tr><tr><td>0E</td><td></td><td>O</td><td>O</td><td>O</td></tr><tr><td>0F</td><td>O</td><td>O</td><td>O</td><td>O</td></tr></table>Symbol O signifies site of IPDU error.	I/F	Error in No. of IPDUs	All stop	Insufficient number of IPDUs are detected when power is turned on.	• Check model setting of P.C. board for servicing outdoor I/F P.C. board. • Check connection of UART communication connector. • Check A3-IPDU, fan IPDU, and I/F P.C. board for defect.

Check code			Location of detection	Description	System status	Error detection condition(s)	Check items (locations)
Wired remote control	Outdoor 7-segment display						
	Check code	Sub-code					
L30	L30	Detected indoor address	Indoor unit	External interlock of indoor unit	Stop of corresponding unit	• Signal is present at external error input terminal (CN80) for 1 minute.	**When external device is connected to CN80 connector:** 1) Check for defect in external device. 2) Check for defect in indoor P.C. board. **When external device is not connected to CN80 connector:** 1) Check for defect in indoor P.C. board.
–	L31	–	I/F	Extended IC error	Continued operation	There is part failure in P.C. board (I/F).	Check outdoor P.C. board (I/F).
P01	–	–	Indoor unit	Indoor fan motor error	Stop of corresponding unit		• Check the lock of fan motor (AC fan). • Check wiring.
P03	P03	–	I/F	Discharge temperature TD1 error	All stop	Discharge temperature (TD1) exceeds 239 °F (115 °C).	• Check outdoor service valves (gas side, liquid side) to confirm full opening. • Check outdoor PMVs (PMV1, 2, 4) for clogging. • Check resistance characteristics of TD1 sensor. • Check for insufficiency in refrigerant quantity. • Check for defect in 4-way valve. • Check for leakage of SV4 circuit. • Check SV4 circuit (wiring or installation error in SV41, SV42 or SV43).
P04	P04	01: Compressor 1 side 02: Compressor 2 side 03: Compressor 3 side	IPDU	Activation of high-pressure SW	All stop	High-pressure SW is activated.	• Check connection of high-pressure SW connector. • Check for defect in Pd pressure sensor. • Check outdoor service valves (gas side, liquid side) to confirm full opening. • Check for defect in outdoor fan. • Check for defect in outdoor fan motor. • Check outdoor PMVs (PMV1, 2) for clogging. • Check indoor/outdoor heat exchangers for clogging. • Check for short-circuiting of outdoor suction/discharge air flows. • Check SV2 circuit for clogging. • Check for defect in outdoor P.C. board (I/F). • Check for error in indoor fan system (possible cause of air flow reduction). • Check opening status of indoor PMV. • Check indoor-outdoor communication line for wiring error. • Check for faulty operation of check valve in discharge pipe convergent section. • Check gas balancing SV4 valve circuit. • Check SV5 valve circuit. • Check for refrigerant overcharging.
P05	P05	00:	I/F	Detection of open phase/ phase sequence	All stop	• Open phase is detected when power is turned on. • Inverter DC voltage is too high (overvoltage) or too low (undervoltage).	• Check for defect in outdoor P.C. board (I/F).
		01: Compressor 1 side 02: Compressor 2 side 03: Compressor 3 side		Inverter DC voltage (Vdc) error (compressor) MG-CTT error			

MG-CTT: Magnet contactor

Check code			Location of detection	Description	System status	Error detection condition(s)	Check items (locations)
Wired remote control	Outdoor 7-segment display						
	Check code	Sub-code					
P07	P07	01: Compressor 1 side 02: Compressor 2 side 03: Compressor 3 side	IPDU I/F	Heat sink overheating error	All stop	Temperature sensor built into IGBT (TH) is overheated.	• Check power supply voltage. • Check outdoor fan system error. • Check heat sink cooling duct for clogging. • Check IGBT and heat sink for thermal performance for faulty installation. (e.g. mounting screws and thermal conductivity) • Check for defect in A3-IPDU. (faulty IGBT built-in temperature sensor (TH))
P10	P10	Detected indoor address	Indoor unit	Indoor overflow error	All stop	• Float switch operates. • Float switch circuit is open-circuited or disconnected at connector.	• Check float switch connector. • Check operation of drain pump. • Check drain pump circuit. • Check drain pipe for clogging. • Check for defect in indoor P.C. board.
P12	–	–	Indoor unit	Indoor fan motor error	Stop of corresponding unit	• Motor speed measurements continuously deviate from target value. • Overcurrent protection is activated.	• Check connection of fan connector and wiring. • Check for defect in fan motor. • Check for defect in indoor P.C. board. • Check impact of outside air treatment (OA).
P13	P13	–	I/F	Outdoor liquid backflow detection error	All stop	<During cooling operation> When system is in cooling operation, high pressure is detected in follower unit that has been turned off. <During heating operation> When system is in heating operation, outdoor PMV 1 or 2 continuously registers opening of 100p or less while under SH control.	• Check full-close operation of outdoor PMV (1, 2, 4). • Check for defect in Pd or Ps sensor. • Check gas balancing circuit (SV2) for clogging. • Check balance pipe. • Check SV3B circuit for clogging. • Check defect in outdoor P.C. board (I/F). • Check capillary of oil separator oil return circuit for clogging. • Check for leakage of check valve in discharge pipe convergent section.
P15	P15	01: TS condition	I/F	Gas leakdetection (TS1 condition)	All stop	Protective shutdown due to sustained suction temperature at or above judgment criterion for at least 10 minutes is repeated four times or more. <TS error judgment criterion> In cooling operation: 140 °F (60 °C) In heating operation: 104 °F (40 °C)	• Check for insufficiency in refrigerant quantity. • Check outdoor service valves (gas side, liquid side) to confirm full opening. • Check PMVs (PMV1, 2) for clogging. • Check resistance characteristics of TS1 sensor. • Check for defect in 4-way valve. • Check SV4 circuit for leakage
		02: TD condition	I/F	Gas leak detection (TD condition)	All stop	Protective shutdown due to sustained discharge temperature (TD1, TD2 or TD3) at or above 226.4 °F (108 °C) for at least 10 minutes is repeated four times or more.	• Check for insufficiency in refrigerant quantity. • Check PMVs (PMV 1, 2) for clogging. • Check resistance characteristics of TD1, TD2 and TD3 sensors. • Check indoor filter for clogging. • Check piping for clogging. • Check SV4 circuit (for leakage or coil installation error).
P17	P17	–	I/F	Discharge temperature TD2 error	All stop	Discharge temperature (TD2) exceeds 239 °F (115 °C).	• Check outdoor service valves (gas side, liquid side) to confirm full opening. • Check outdoor PMVs (PMV1, 2, 4) for clogging. • Check resistance characteristics of TD2 sensor. • Check for defect in 4-way valve. • Check SV4 circuit for leakage. • Check SV4 circuit (for wiring or installation error involving SV41, SV42 and SV43).

Check code			Location of detection	Description	System status	Error detection condition(s)	Check items (locations)
Wired remote control	Outdoor 7-segment display						
	Check code	Sub-code					
P18	P18	–	I/F	Discharge temperature TD3 error	All stop	Discharge temperature (TD3) exceeds 239 °F (115 °C).	• Check outdoor service valves (gas side, liquid side) to confirm full opening. • Check outdoor PMVs (PMV1, 2, 4) for clogging. • Check resistance characteristics of TD3 sensor. • Check for defect in 4-way valve. • Check SV43 circuit for leakage. • Check SV4 circuit (for wiring or installation error involving SV41, SV42 and SV43).
P19	P19	Detected outdoor unit No.	I/F	4-way valve reversing error	All stop	Abnormal refrigerating cycle data is collected during heating operation.	• Check for defect in main body of 4-way valve. • Check for coil defect in 4-way valve and loose connection of its connector. • Check resistance characteristics of TS1 and TE1 sensors. • Check output voltage characteristics of Pd and Ps pressure sensors. • Check for wiring error involving TE1 and TL sensors.
P20	P20	–	I/F	Activation of high-pressure protection	All stop	Pd sensor detects pressure equal to or greater than 522 psi (3.6 MPa).	• Check for defect in Pd pressure sensor. • Check service valves (gas side, liquid side) to confirm full opening. • Check for defect in outdoor fan. • Check for defect in outdoor fan motor. • Check outdoor PMVs (PMV1, 2, 4) for clogging. • Check indoor/outdoor heat exchangers for clogging. • Check for short-circuiting of outdoor suction/discharge air flows. • Check SV2 circuit for clogging. • Check for defect in outdoor P.C. board (I/F). • Check for defect in indoor fan system (possible cause of air flow reduction). • Check opening status of indoor PMV. • Check indoor-outdoor communication line for wiring error. • Check for faulty operation of check valve in discharge pipe convergent section. • Check gas balancing SV4 valve circuit. • Check SV5 valve circuit. • Check for refrigerant overcharging.

Check code			Location of detection	Description	System status	Error detection condition(s)	Check items (locations)
Wired remote control	Outdoor 7-segment display						
	Check code	Sub-code					
P22	P22	0∗: IGBT circuit 1∗: Position detection circuit error 3∗: Motor lockup error 4∗: Motor current detection C∗: TH sensor temperature error D∗: TH sensor error E∗: Inverter DC voltage error (outdoor fan) **Note:** **Although letters 0 to F appear at locations indicated by "∗", please ignore them.**	IPDU	Outdoor fan IPDU error	All stop	(Sub code: 0∗) Fan IPDU over current protection circuit Flow of current equal to or greater than the specified value is detected during startup of the fan.	• Check fan motor. • Check for defect in fan IPDU P.C. board.
					All stop	(Sub code: 1∗) Fan IPDU position detection circuit Position detection is not going on normally.	• Check fan motor. • Check connection of fan motor connector. • Check for defect in fan IPDU P.C. board.
					All stop	(Sub code: 3∗) Gusty wind, an obstruction, or another external factor Speed estimation is not going on normally.	• Check fan motor. • Check for defect in fan IPDU P.C. board.
					All stop	(Sub code: 4∗) Fan IPDU over current protection circuit Flow of current equal to or greater than the specified value is detected during operation of the fan.	• Check fan motor. • Check connection of fan motor connector. • Check for defect in fan IPDU P.C. board.
					All stop	(Sub code: C∗) Higher temperature than the specified value is detected during operation of the fan.	• Check fan motor. • Check for defect in fan IPDU P.C. board.
					All stop	(Sub code: D∗) The resistance value of the sensor is infinite or zero (open or short circuit).	• Check for defect in fan IPDU P.C. board.
					All stop	(Sub code: E∗) Fan IPDU DC voltage protection circuit The DC voltage higher or lower than the specified value is detected.	• Check power voltage of the main power supply. • Check for defect in fan IPDU P.C. board. • Check connection of fan IPDU P.C. board.
P26	P26	01: Compressor 1 side 02: Compressor 2 side 03: Compressor 3 side	IPDU	G-TR short-circuit protection error	All stop	Overcurrent is momentarily detected during startup of compressor.	• Check connector connection and wiring on A3-IPDU P.C. board. • Check for defect in compressor (layer short-circuit). • Check for defect in outdoor P.C. board (A3-IPDU).
P29	P29	01: Compressor 1 side 02: Compressor 2 side 03: Compressor 3 side	IPDU	Compressor position detection circuit error	All stop	Position detection is not going on normally.	• Check wiring and connector connection. • Check for compressor layer short-circuit. • Check for defect in A3-IPDU P.C. board.
P31	–	–	Indoor unit	Other indoor error (group follower unit error)	Stop of corresponding unit	There is error in other indoor unit in group, resulting in detection of E07/L07/L03/L08.	• Check indoor P.C. board.

Errors Detected by TCC-LINK Central Control Device

Check code			Location of detection	Description	System status	Error detection condition(s)	Check items (locations)
Wired remote control	Outdoor 7-segment display						
	Sub-code						
C05	–		TCC-LINK	TCC-LINK central control device transmission error	Continued operation	Central control device is unable to transmit signal.	• Check for defect in central control device. • Check for defect in central control communication line. • Check termination resistance setting.
C06	–			TCC-LINK central control device reception error	Continued operation	Central control device is unable to receive signal.	• Check for defect in central control device. • Check for defect in central control communication line. • Check termination resistance setting. • Check power supply for devices at other end of central control communication line. • Check defect in P.C. boards of devices at other end of central control communication line.
C12	–		General-purpose device I/F	Blanket alarm for general-purpose device control interface	Continued operation	Error signal is input to control interface for general-purpose devices.	• Check error input.
P30	Differs according to nature of alarm-causing error		TCC-LINK	Group control follower unit error	Continued operation	Error occurs in follower unit under group control. ([P30] is displayed on central control remote controller.)	• Check check code of unit that has generated alarm.
	(L20 displayed.)			Duplicated central control address	Continued operation	There is duplication in central control addresses.	• Check address settings.

▼ Points to Note When Servicing Compressor

(1) When checking the outputs of inverters, remove the wiring from all the compressors.

▼ How to Check Inverter Output

(1) Turn off the power supply.

(2) Remove compressor leads from the IPDU P.C. board (A3-IPDU). (Be sure to remove all the leads.)

(3) Turn on the power supply and start cooling or heating operation.
Be careful not to make simultaneous contact with two or more faston connectors for compressor leads or a faston connector and some other object (e.g. the unit cabinet).

(4) Check the output voltage across each pair of inverter-side (CN201, CN202, CN203).
If the result is unsatisfactory according to the judgment criteria given in the table below, replace the IPDU P.C. board.

No.	Measured	Criterion
1	CN201 - CN202	180 V - 300 V
2	CN202 - CN203	180 V - 300 V
3	CN203 - CN201	180 V - 300 V

* When connecting the compressor leads back to the compressor terminals after checking the output, check the faston connectors thoroughly to ensure that they are not crooked. If there is any loose connector, tighten it with a pair of pliers, etc. before connecting the lead.

▼ How to Check Resistance of Compressor Winding

(1) Turn off the power supply.

(2) Remove compressor leads from the compressors.

(3) With each compressor, check the phase-to-phase winding resistances and winding-to-outdoor cabinet resistance using a multimeter.
- Earth fault?
  → It is normal if the winding-to-outdoor cabinet resistance is 10 MΩ or more.
- Inter-winding short circuit?
  → It is normal if the phase-to-phase resistances are in the 0.1-0.4 Ω range. (Use a digital multimeter.)

▼ How to Check Outdoor Fan Motor

(1) Turn off the power supply.

(2) Remove fan motor leads from the IPDU P.C. board for the outdoor fan (CN703-CN705).

(3) Rotate the fan by hand. If the fan does not turn, the fan motor is faulty (locked up). Replace the fan motor.
If the fan turns, measure the phase-to-phase winding resistances using a multimeter. It is normal if the measurements are in the 1.14-1.70 Ω range. (Use a digital multimeter.)

9-5. Diagnosis procedure for each check code

Check code	Check code name	Cause
[E01]	Communication error between the indoor unit and remote control (detected on the remote control)	1. Remote control inter-unit wire error 2. Indoor power error 3. Indoor P.C. board error 4. Remote control address setup error 5. Remote control P.C. board error

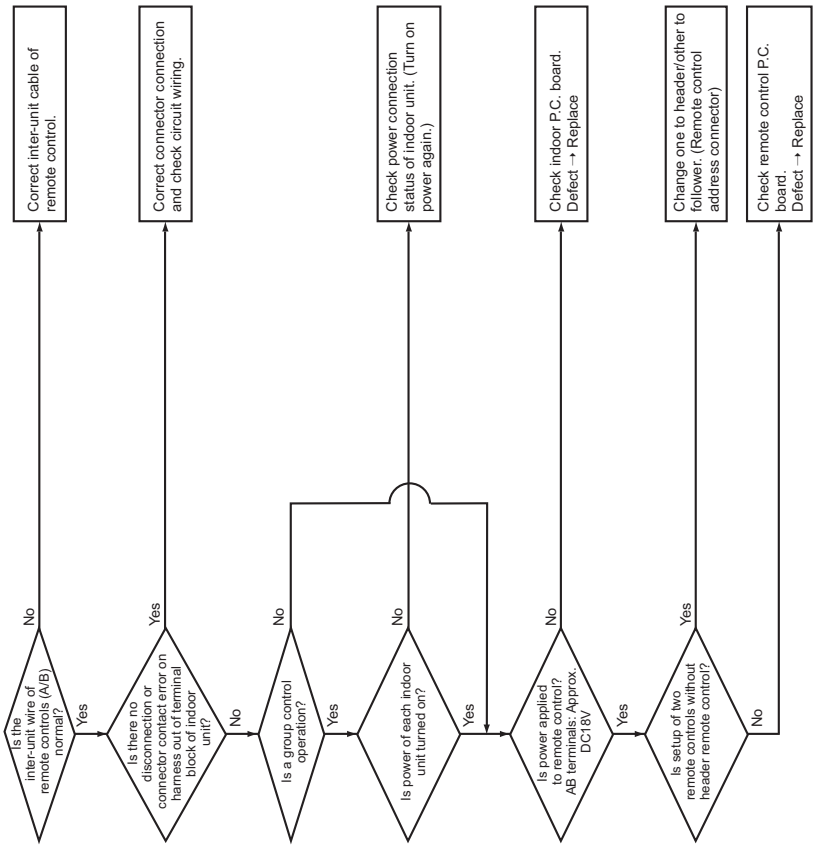

Check code	Check code name	Cause
[E02]	Signal transmission error on the remote controller	Unable to send signals to indoor units

* The check code is not indicated on the central control device or the 7-segment indication on the outdoor unit.

Check code	Check code name	Cause
[E03]	Communication error between the indoor unit and remote control (detected on the indoor unit)	No communication from the remote control/communication interface

The error is detected when the indoor unit cannot receive the signal from the wired remote control.
Check the communication wiring from the remote control A and B.
The check code [E03] is not indicated on the remote control as its communication is down.
However, the code is indicated on the compliant manager of TCC-LINK.

Check code	Check code name	Cause
[E06]	Decreased number of indoor units	1. Communication lines (U1, U2) connection error between indoor and outdoor 2. Communication connector's connection error on indoor unit, error on P.C. board 3. Communication connector's connection error on outdoor unit, error on I/F board 4. Power supply of indoor unit (Is power turned on?)

Sub-code: No. of indoor units which received signals normally

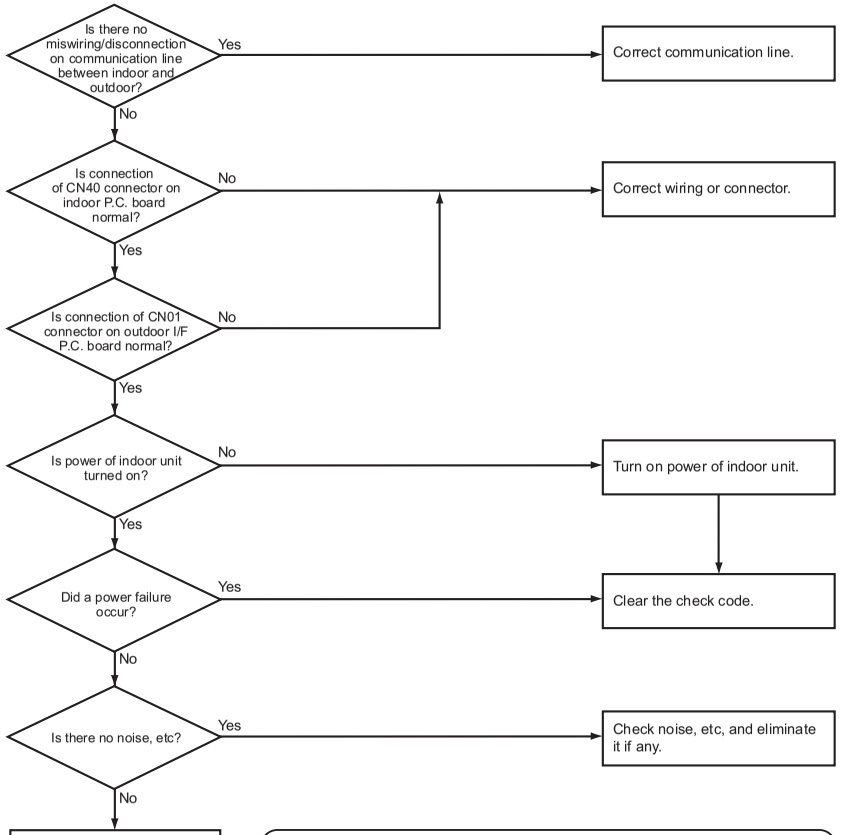

(NOTE)
1. When signal is not sent for a certain period from the indoor unit which has used to send signals normally, [E06] is displayed.

Check code	Check code name	Cause
[E04]	Indoor/Outdoor communication circuit error (Detected at indoor side)	1. Power of outdoor unit was firstly turned on. 2. Connection error of communication line between indoor and outdoor 3. End terminal resistance setup error on communication between indoor and outdoor 4. Address setup error

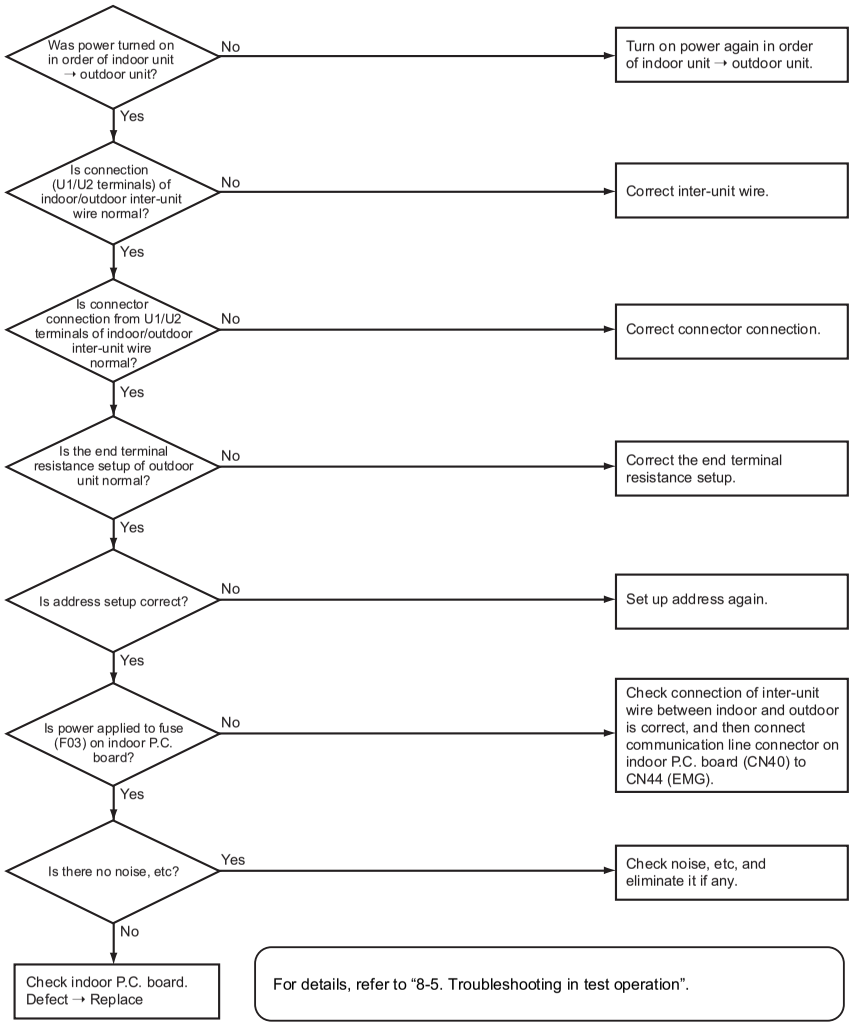

For details, refer to “8-5. Troubleshooting in test operation”.

Check code	Check code name	Cause
[E08]	Duplicated indoor addresses	Indoor addresses are duplicated.

Sub-code: Duplicated indoor address

Using a wired remote controller (RBC-AMT32E), check the setup CODE No. (DN code) 12, 13, and 14.
When there is no address duplication, check to the following flowchart.

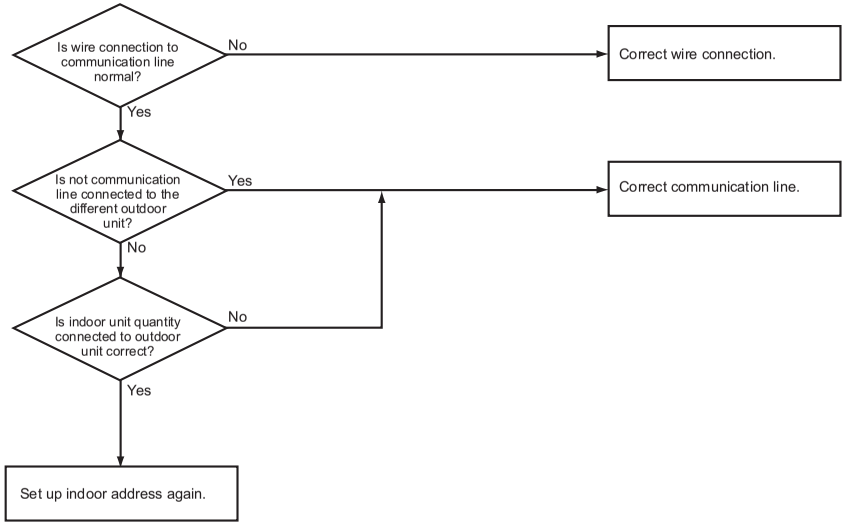

Check code	Check code name	Cause
[E07]	Indoor/Outdoor communication circuit error (Detected at outdoor side)	1. Indoor/outdoor communication end terminal resistance setup error 2. Indoor/outdoor communication connection error

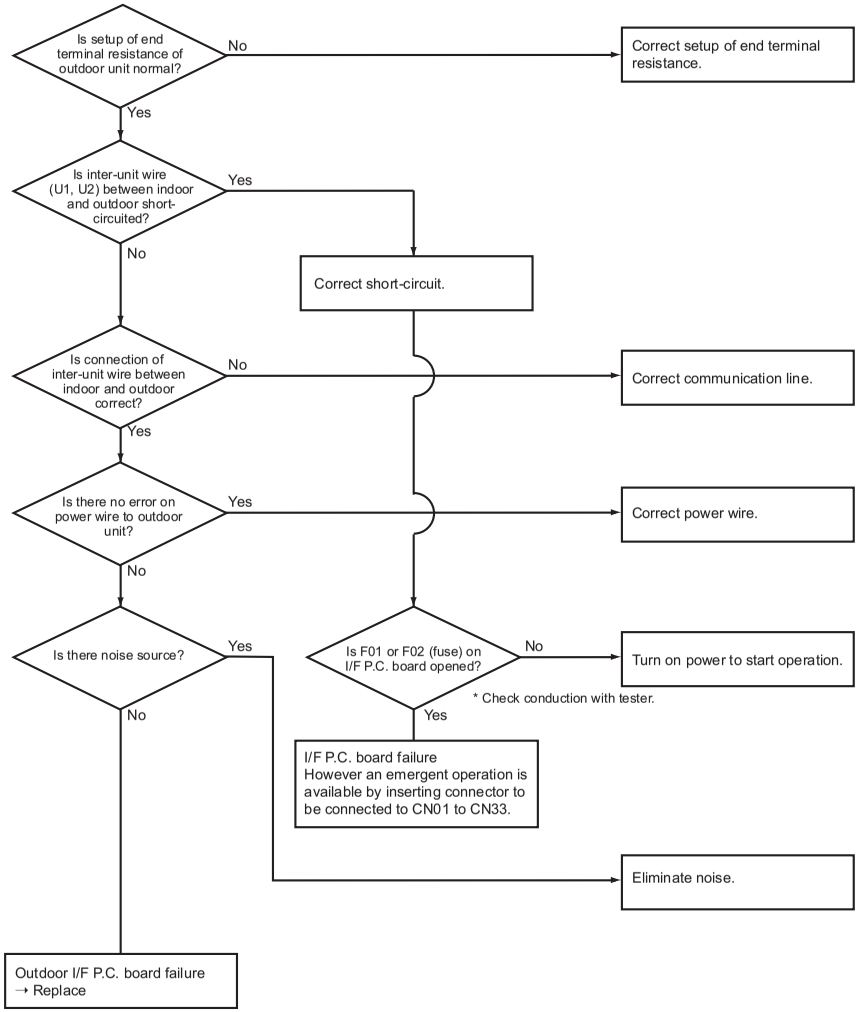

Check code	Check code name	Cause
[E15]	No corresponding indoor unit during automatic address	1. Communication line connection error between indoor and outdoor 2. Indoor power system error 3. Noise from surrounding devices 4. Power failure 5. Indoor P.C. board error

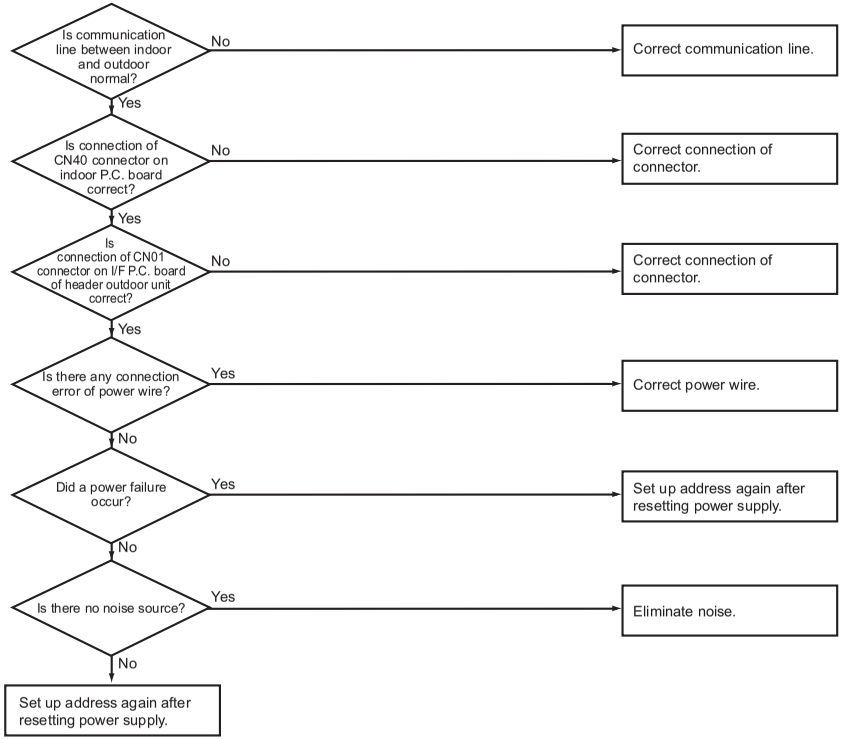

Check code	Check code name	Cause
[E09]	Duplicated header remote control	Setup of header remote control is duplicated.

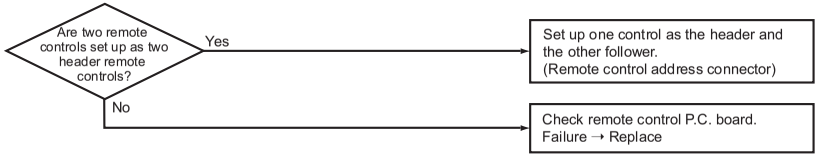

Check code	Check code name	Cause
[E10]	Communication error between indoor MCUs.	Indoor P.C. board error.

Check code	Check code name	Cause
[E12]	Automatic address start error	1. Starting automatic addressing of indoor units during automatic addressing in another refrigerant line. (Sub-code: 01) 2. Starting automatic addressing of outdoor units during automatic addressing of indoor units (Sub-code: 02)

Sub-code: 01: Communication between indoor and outdoor 02: Communication between outdoor units

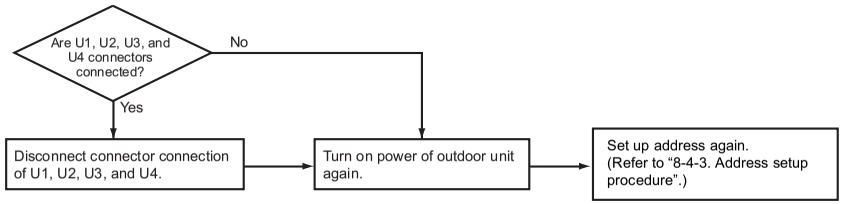

Check code	Check code name	Cause
[E18]	Communication error between indoor header and follower	Regular communication between indoor header and follower is unavailable.

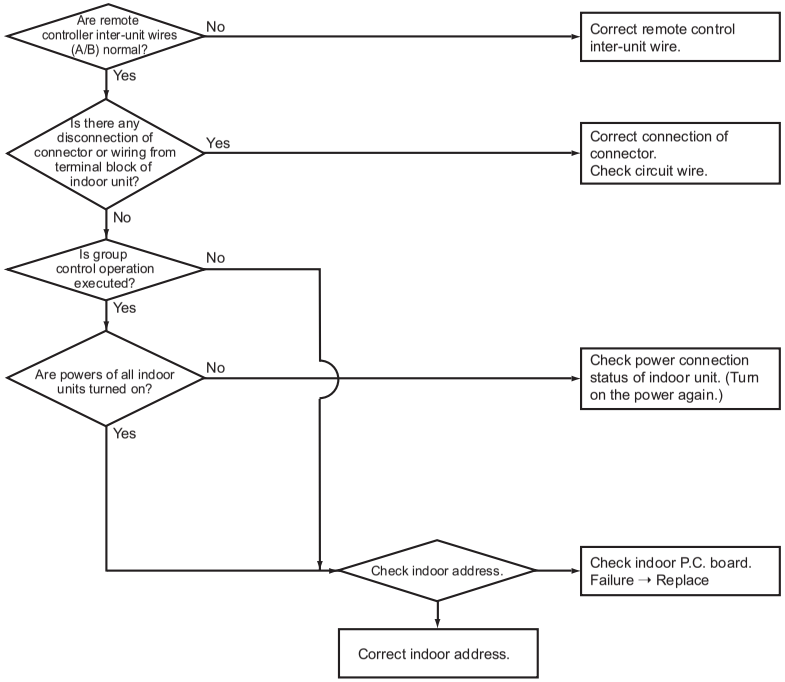

Check code	Check code name	Cause
[E16]	Number/capacity of connected indoor units beyond the limit	1. There are 48 or more connected indoor units. 2. Capacity over of total connected indoor units. 3. Incorrect setup of indoor units' power

Sub-code: 00 : Capacity over, 01-: number of connected units

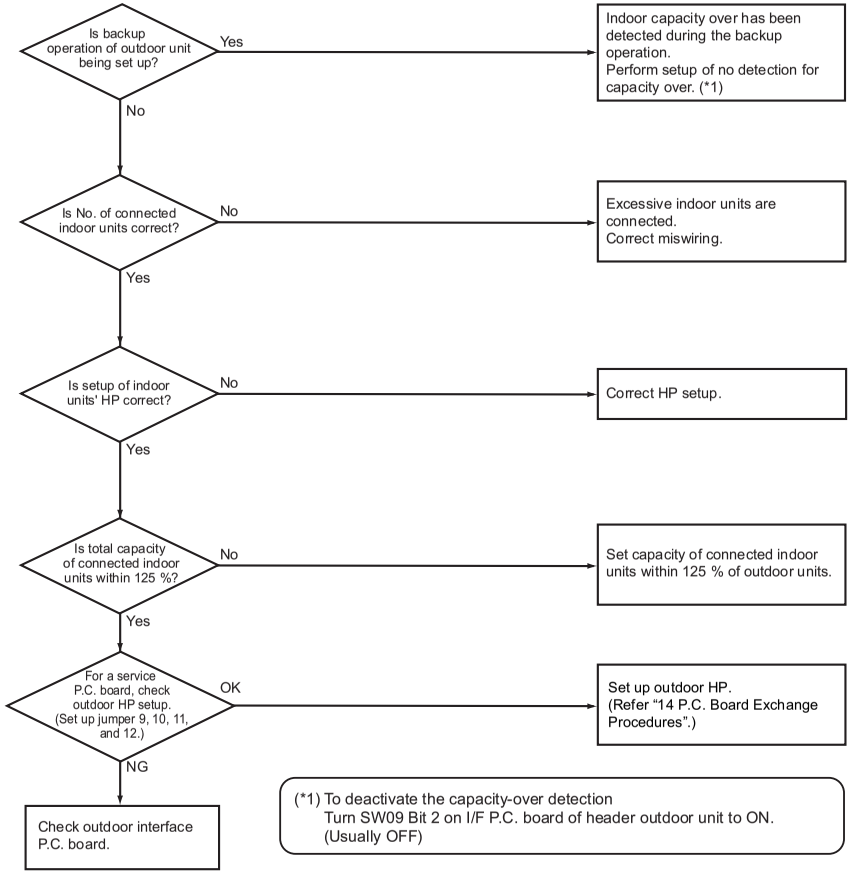

(*1) To deactivate the capacity-over detection
Turn SW09 Bit 2 on I/F P.C. board of header outdoor unit to ON.
(Usually OFF)

Check code	Check code name	Cause
[E23]	Communication signal sending error between outdoor units	1. Inter-unit wire connection error between outdoor units 2. Communication connector connection error between outdoor units, I/F P.C. board error 3. End terminal resistance setup error between outdoor units

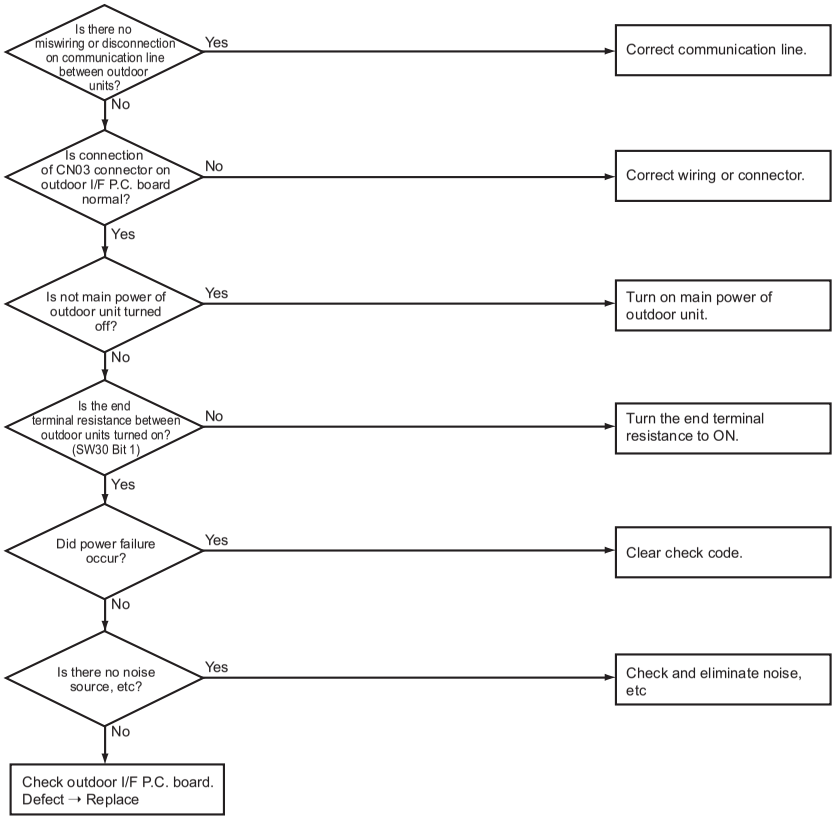

Check code	Check code name	Cause
[E19]	Header outdoor unit quantity error	1. Misconnection of inter-unit wire between indoor and outdoor 2. Outdoor I/F P.C. board error

Sub-code: 00: No header unit 02: Two or more header units

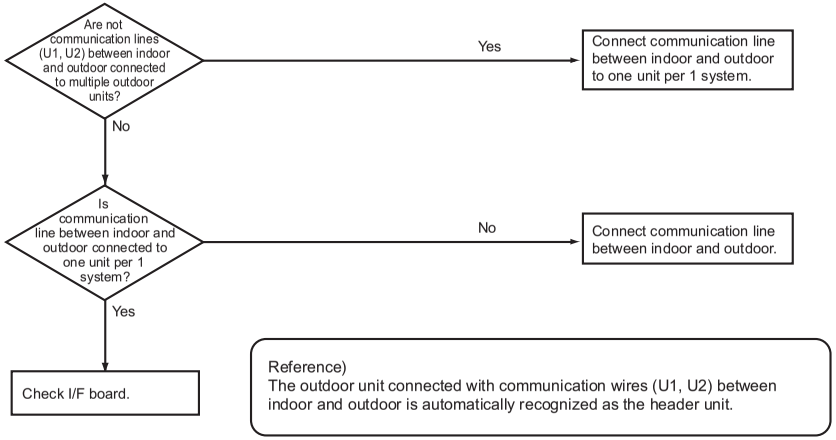

Reference)
The outdoor unit connected with communication wires (U1, U2) between indoor and outdoor is automatically recognized as the header unit.

Check code	Check code name	Cause
[E20]	Unit connected to other line during automatic address	When starting automatic indoor address, a device in another line is connected.

Sub-code: 01: Connection of an outdoor unit in another line 02: Connection of an indoor unit in another line

Separate the connection between the lines following the address setup method.

Check code	Check code name	Cause
[E31]	IPDU communication error	1. Connection error of communication line between IPDU and I/F P.C. board 2. I/F P.C. board error 3. IPDU P.C. board error 4. External noise

Sub-code

	A3-IPDU			Fan IPDU		A3-IPDU			Fan IPDU
	1	2	3			1	2	3	
01	O				0A		O		O
02		O			0B	O	O		O
03	O	O			0C			O	O
04			O		0D	O		O	O
05	O		O		0E		O	O	O
06		O	O		0F	O	O	O	O
07	O	O	O		O: Part where IPDU error has occurred.				
08				O					
09	O			O					

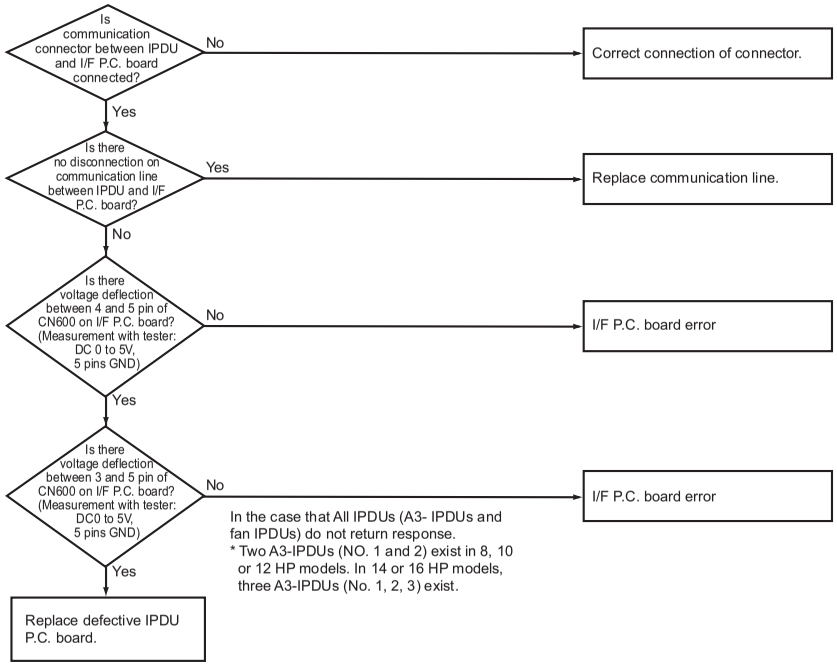

In the case that All IPDUs (A3- IPDUs and fan IPDUs) do not return response.
* Two A3-IPDUs (NO. 1 and 2) exist in 8, 10 or 12 HP models. In 14 or 16 HP models, three A3-IPDUs (No. 1, 2, 3) exist.

Check code	Check code name	Cause
[E25]	Duplicated follower outdoor address setup	Addresses are duplicated by manual setup of outdoor address

Do not set up outdoor addresses manually.

Check code	Check code name	Cause
[E26]	Decrease of connected outdoor units	1. Outdoor unit backup setup 2. Outdoor power error 3. Communication line connection error between outdoor units 4. Communication connector connection error 5. Outdoor I/F P.C. board error

Sub-code: Address of the outdoor unit receiving signal abnormally

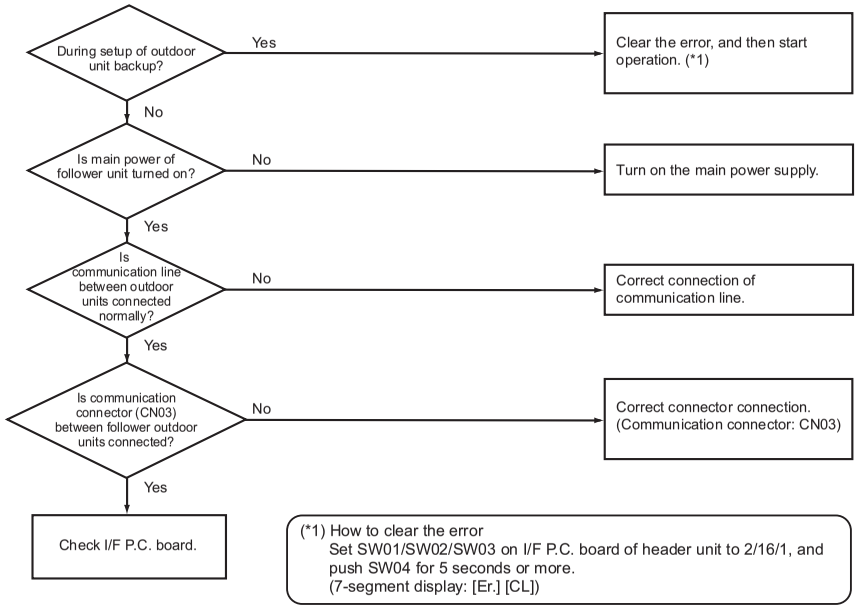

(*1) How to clear the error
Set SW01/SW02/SW03 on I/F P.C. board of header unit to 2/16/1, and push SW04 for 5 seconds or more.
(7-segment display: [Er.] [CL])

Check code	Check code name	Cause
[E28]	Follower outdoor unit error	Error has occurred on a follower outdoor unit.

Sub-code: Detected outdoor unit No.

An error occurred on a follower unit. See the check code on the 7-segment display on I/F P.C. board of the follower unit, and then check it according to diagnose procedure for the check code.
(How to specify the follower outdoor unit in which error occurred)
Push SW04 for 1 second or more under condition that [E28] is displayed on the 7-segment display of the header unit. The fan of the outdoor unit which stopped due to occurrence of error starts rotating. Push SW05 to stop the fan.

Check code	Check code name	Cause
[F03]	Indoor TC1 sensor error	TC1 sensor Open/Short

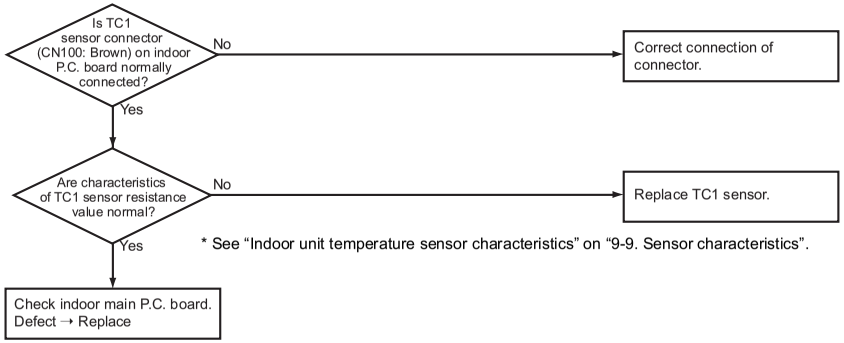

* See “Indoor unit temperature sensor characteristics” on “9-9. Sensor characteristics”.

Check code	Check code name	Cause
[F04]	TD1 sensor error	TD1 sensor Open/Short

This error code means detection of Open/Short of TD1 sensor. Check disconnection of circuit for connection of connector (TD1 sensor: CN502, White) and characteristics of sensor resistance value. (See “Outdoor unit temperature sensor characteristics” on “9-9. Sensor characteristics”.)
If sensor is normal, replace outdoor I/F P.C. board.

Check code	Check code name	Cause
[F05]	TD2 sensor error	TD2 sensor Open/Short

This error code means detection of Open/Short of TD2 sensor. Check disconnection of circuit for connection of connector (TD2 sensor: CN503, Pink) and characteristics of sensor resistance value. (See “Outdoor unit temperature sensor characteristics” on “9-9. Sensor characteristics”.)
If sensor is normal, replace outdoor I/F P.C. board.

Check code	Check code name	Cause
[F06]	TE1 sensor error	TE1 sensor Open/Short

This error code means detection of Open/Short of TE1 sensor. Check disconnection of circuit for connection of connector (TE1 sensor: CN505, Green) and characteristics of sensor resistance value. (See “Outdoor unit temperature sensor characteristics” on “9-9. Sensor characteristics”.)
If sensor is normal, replace outdoor I/F P.C. board.

Check code	Check code name	Cause
[F01]	Indoor TCJ sensor error	TCJ sensor Open/Short

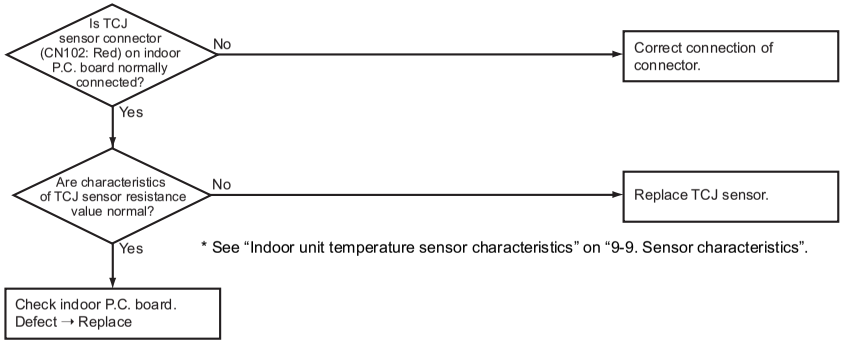

* See “Indoor unit temperature sensor characteristics” on “9-9. Sensor characteristics”.

Check code	Check code name	Cause
[F02]	Indoor TC2 sensor error	TC2 sensor Open/Short

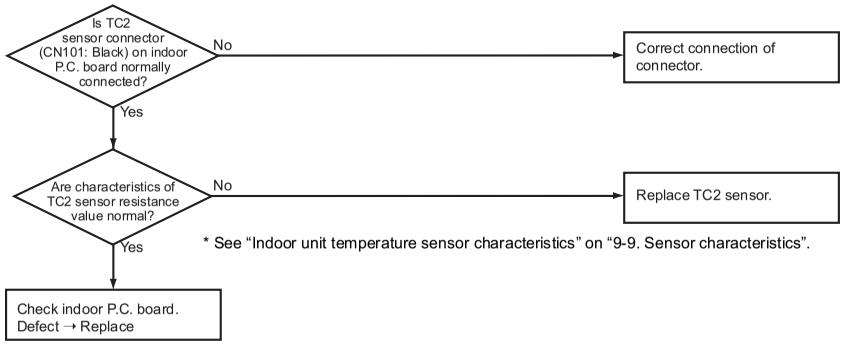

* See “Indoor unit temperature sensor characteristics” on “9-9. Sensor characteristics”.

Check code	Check code name	Cause
[F15]	Outdoor temp sensor miswiring (TE1, TL)	1. Misinstallation and misconnection of TE1 sensor and TL sensor 2. Resistance characteristics error of TE1 sensor and TL sensor 3. Outdoor P.C. board (I/F) error

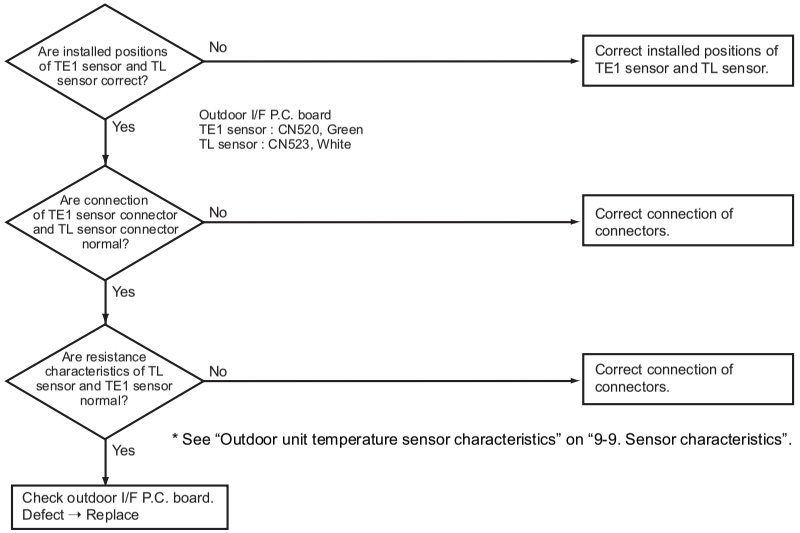

* See “Outdoor unit temperature sensor characteristics” on “9-9. Sensor characteristics”.

TE1 sensor: Outdoor heat exchanger temp sensor
TL sensor: Temp sensor between liquid tanks of outdoor PMV1/2

Check code	Check code name	Cause
[F07]	TL sensor error	TL sensor Open/Short

This error code means detection of Open/Short of TL sensor. Check disconnection of circuit for connection of connector (TL sensor: CN523, White) and characteristics of sensor resistance value. (See “Outdoor unit temperature sensor characteristics” on “9-9. Sensor characteristics”.)
If sensor is normal, replace outdoor I/F P.C. board.

Check code	Check code name	Cause
[F08]	TO sensor error	TO sensor Open/Short

This error code means detection of Open/Short of TO sensor. Check disconnection of circuit for connection of connector (TO sensor: CN507, Yellow) and characteristics of sensor resistance value. (See “Outdoor unit temperature sensor characteristics” on “9-9. Sensor characteristics”.)
If sensor is normal, replace outdoor I/F P.C. board.

Check code	Check code name	Cause
[F10]	Indoor TA sensor error	TA sensor Open/Short

This error code means detection of Open/Short of TA sensor. Check disconnection of circuit for connection of connector (TA sensor: CN104, Yellow) and characteristics of sensor resistance value. (See “Indoor unit temperature sensor characteristics” on “9-9. Sensor characteristics”.)
If sensor is normal, replace indoor P.C. board.

Check code	Check code name	Cause
[F12]	TS1 sensor error	TS1 sensor Open/Short

This error code means detection of Open/Short of TS1 sensor. Check disconnection of circuit for connection of connector (TS1 sensor: CN505, White) and characteristics of sensor resistance value. (See “Outdoor unit temperature sensor characteristics” on “9-9. Sensor characteristics”.)
If sensor is normal, replace outdoor I/F P.C. board.

Check code	Check code name	Cause
[F13]	TH sensor error	IGBT built-in sensor error in A3-IPDU

Sub-code: 01: Compressor 1, 02: Compressor 2, 03: Compressor 3

This error code means IGBT built-in temperature sensor error.
Check connection of connectors CN06 on IPDU P.C. board and CN600 on I/F P.C. board.
If sensor is normal, replace IPDU P.C. board.

Check code	Check code name	Cause
[F23]	Ps sensor error	Output voltage error of Ps sensor

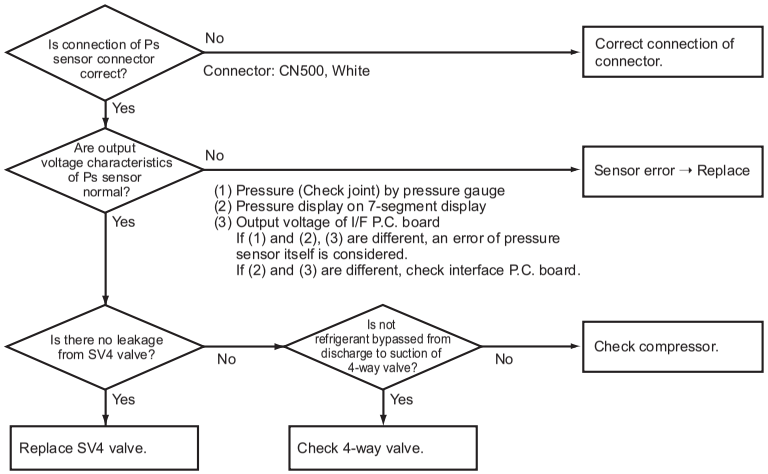

Check code	Check code name	Cause
[F24]	Pd sensor error	Output voltage error of Pd sensor

It is output voltage error of Pd sensor. Check disconnection of connection of connector (Pd sensor: CN501, red) circuit and output voltage of sensor.
If the sensor is normal, replace outdoor I/F P.C. board.

Check code	Check code name	Cause
[F16]	Outdoor pressure sensor miswiring (Pd, Ps)	1. High-pressure Pd sensor and low pressure sensor Ps are exchanged. 2. Output voltage of each sensor is zero.

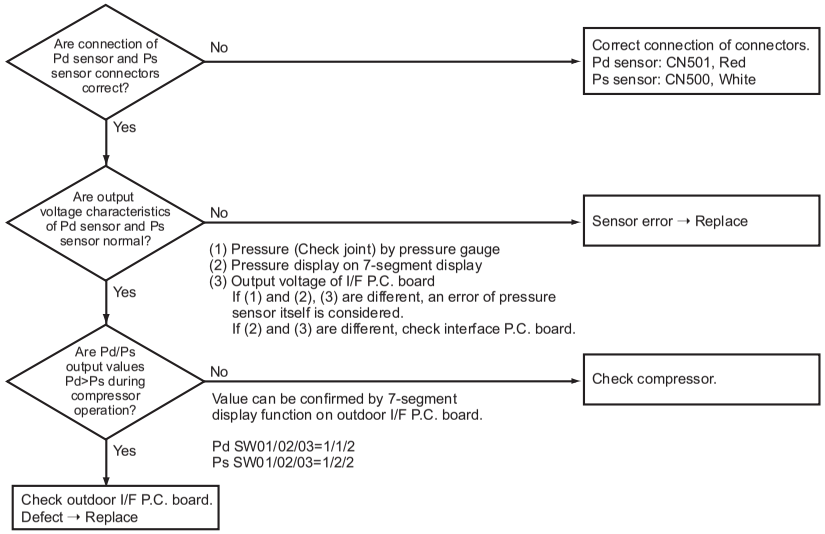

Check code	Check code name	Cause
[F22]	TD3 sensor error	TD3 sensor Open/Short

This error code means detection of Open/Short of TD3 sensor. Check disconnection of circuit for connection of connector (TD3 sensor: CN504, blue) and characteristics of sensor resistance value. (See "Outdoor unit temperature sensor characteristics" on "9-9. Sensor characteristics".)
If sensor is normal, replace outdoor I/F P.C. board.

Check code	Check code name	Cause
[H01]	Compressor breakdown Rotor-stop conduction has occurred.	1. Outdoor unit power line error 2. Compressor circuit system error 3. Compressor error 4. Abnormal overload in operation 5. A3-IPDU P.C. board error

Sub-code:
01: Compressor 1,
02: Compressor 2,
03: Compressor 3

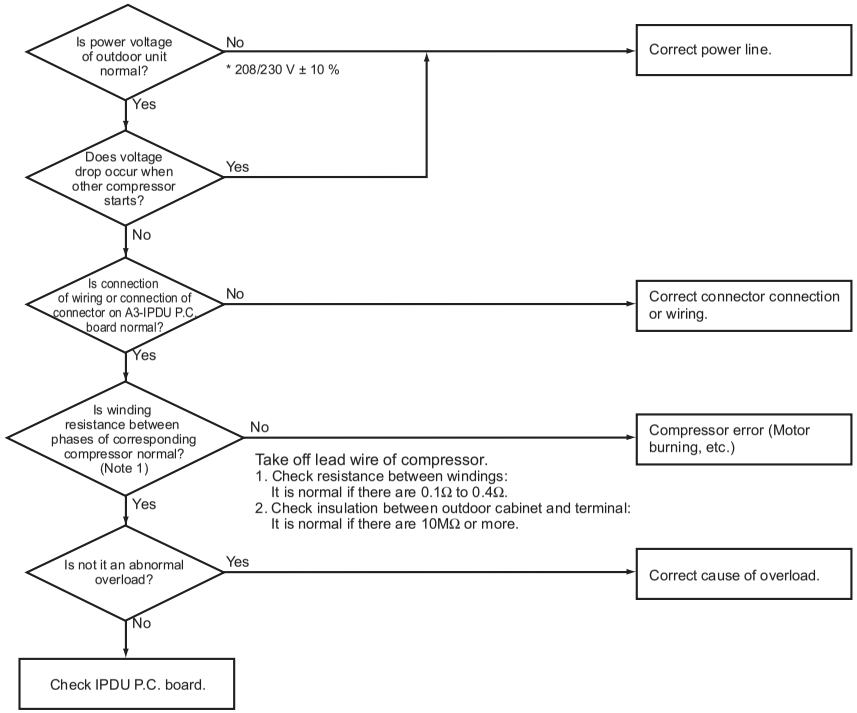

Note 1
After checking the output, when connecting the compressor lead again to the compressor terminal, check surely there is no distortion on the Fasten receptacle terminal.
If it is loosened, caulk it with pinchers, etc and then connect lead to the terminal firmly.

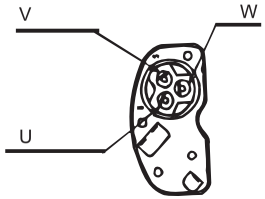

Details of compressor power connecting section

Check code	Check code name	Cause
[F29]	Indoor other error	Indoor P.C. board error

This error is detected during operation of air conditioner of IC10 non-volatile memory (EEPROM) on indoor unit P.C.board. Replace service P.C. board.

* If EEPROM was not inserted when power was turned on or it is absolutely impossible to read/write EEPROM data, the automatic address mode is repeated.

Check code	Check code name	Cause
[F31]	Outdoor EEPROM error	1. Outdoor unit power error (Voltage, noise, etc.) 2. Outdoor I/F P.C. board error

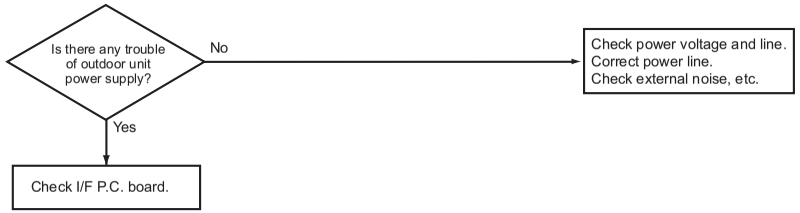

Check code	Check code name	Cause
[H03]	Current detective circuit system error	1. Wiring or connector connection error on A3-IPDU P.C. board 2. A3-IPDU P.C. board error

Sub-code:
01: Compressor 1,
02: Compressor 2,
03: Compressor 3

Check code	Check code name	Cause
[H02]	Compressor error (Lock)	1. Outdoor unit power line error 2. Compressor circuit system error 3. Compressor error 4. Refrigerant stagnation in compressor shell 5. A3-IPDU P.C. board error 6. MG-CTT error

Sub-code:
01: Compressor 1,
02: Compressor 2,
03: Compressor 3

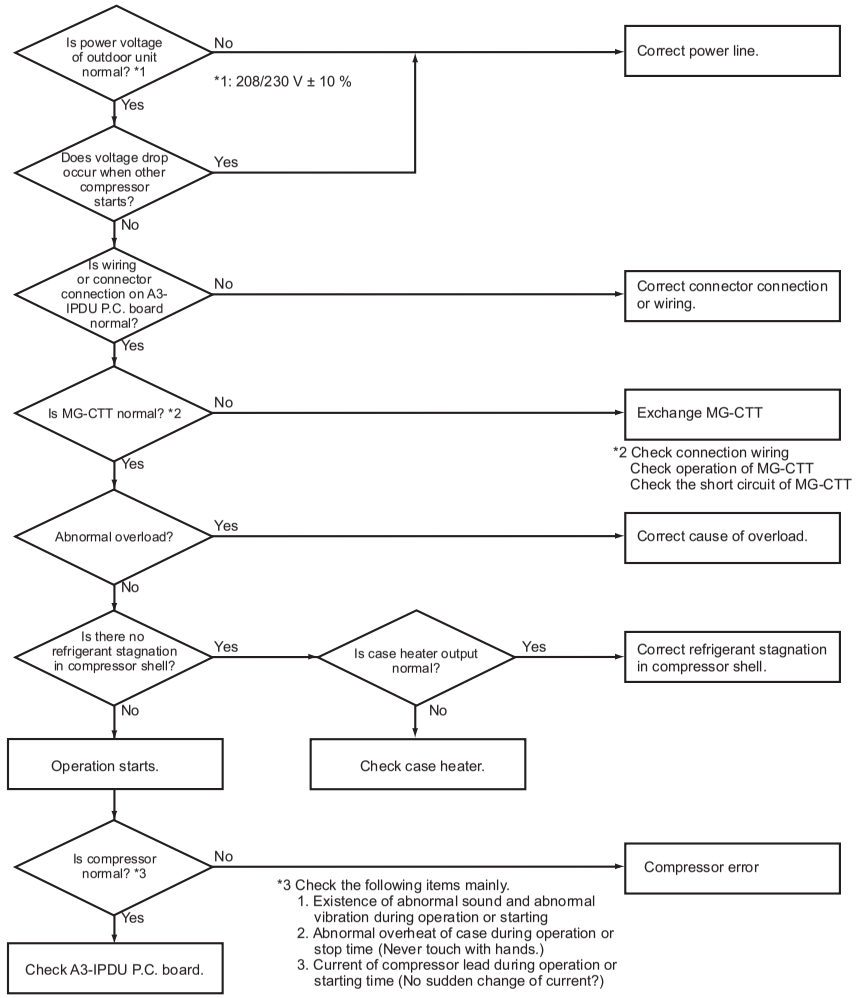

MG-CTT: Magnet contactor

Check code	Check code name	Cause
[H06]	Low-pressure protective operation	1. Service valve close 2. Ps sensor error 3. SV2, SV4 circuit error 4. Miswiring of communication between indoor and outdoor 5. Indoor/outdoor fan and condenser error 6. Indoor/outdoor PMV clogging 7. Indoor/outdoor heat exchanger clogging 8. Refrigerant shortage

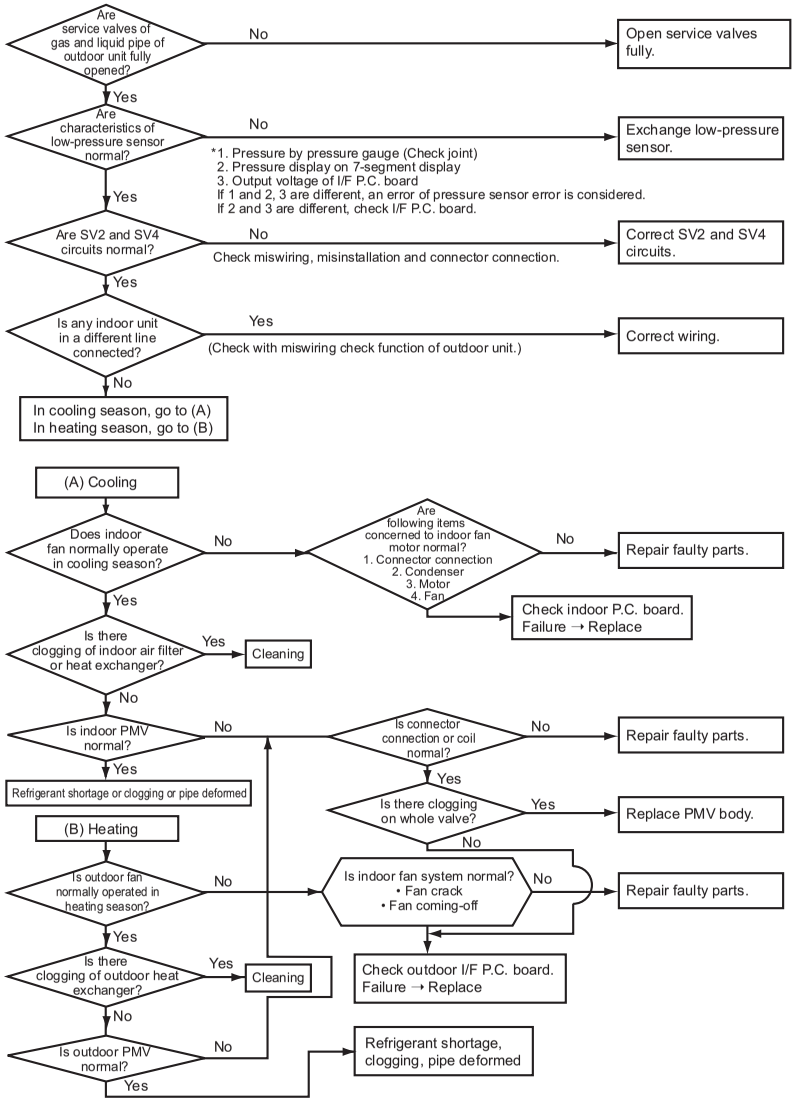

Check code	Check code name	Cause
[H05]	Outdoor discharge temperature sensor (TD1) misconnection	1. Coming-off of TD1 sensor 2. Misinstallation of TD1, TD2, or TD3 sensor, miswiring, characteristics error of resistance value

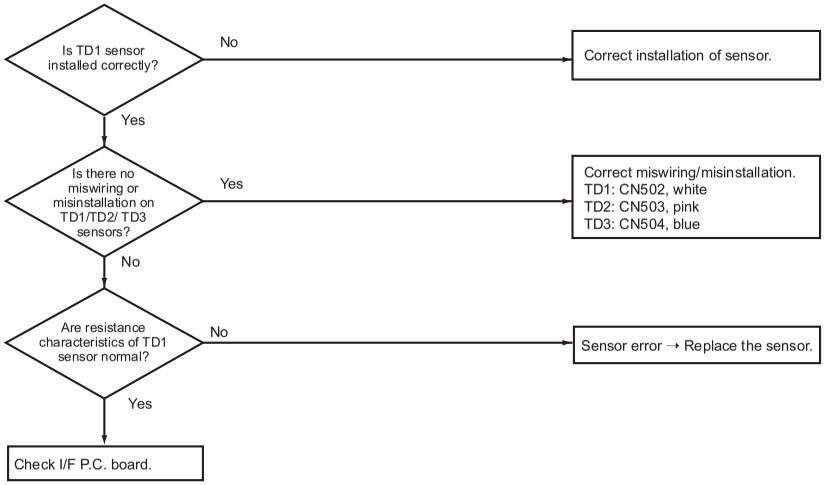

In some cases, it may be difficult to check the leakage of clogging in the following condition of refrigerant stagnation in low ambient temperature condition.
In this case, take a longer operating time prior to check.
(Criterion: Discharge temperature of TD1 and TD2 are 60ºC or higher)

(*1) Checking leakage and clogging on solenoid valves

a) Leakage check for SV3A valve (For multiple outdoor unit system)

- Turn off the power supply, take off connector of SV3A valve, and then start a test operation after power-ON.
- Check the temperature change at secondary side of SV3A valve during operation . ((1) in the figure.)
  → If temperature is raised, leakage occurs in the SV3A valve. Replace SV3A valve.

b) Leakage check for SV3C valve

- Turn off the power supply, take off connector of SV3C valve, and then start a test operation after power-ON.
- After operation for several minutes, check temperature at secondary side of SV3C valve. ((2) in the figure.)
  → If temperature is high (equivalent to discharge temperature TD), leakage occurs in the SV3C valve. Replace SV3C valve.
  (Even if leakage does not occur in the SV3C valve, temperature of SV3C valve at secondary side rises during operation. But the temperature is lower than TD when there is no leakage.)

c) Leakage check for SV3F valve (For multiple outdoor unit system)

- Turn off the power supply, take off connector of SV3F valve, and then start a test operation after power-ON.
- Check the temperature change at secondary side of SV3F valve during operation . ((3) in the figure.)
  → If temperature is raised, leakage occurs in the SV3A valve. Replace SV3A valve.

d) Clogging check for SV3B valve (For multiple outdoor unit system)

- While outdoor unit is operated, set up SW01/02/03 = [2] [1] [3] (7-segment display [Hr] [... ... ...]), and push SW04 for 2 seconds or more.
- Set up SW02 = [10], and turn on SV3A, SV3B, SV3C valves. (7-segment display [Hr] [... 3 -])
- While outdoor units are operating, check temperature change at secondary side of SV3B valve. ((4) in the figure.)
  → If temperature does not rise (equivalent to suction temperature), it is a clogging of SV3B valve. Replace SV3B valve.

e) Clogging for SV3E valve

Reset the power supply.
↓
Using "Valve forced open/close function" of the outdoor unit, check ON/OFF operation (Sound, coil surface temp up) of SV3E valve is performed.
↓
Start test operation in COOL or HEAT mode.
↓
After operation for several minutes, check the pipe temperature at the secondary side of SV3E valve whether temperature changes or not. If it is equivalent to outside temperature, clogging of SV3E is considered. ((5) in the figure.)
(Reference)
If SV3E valve is clogged, temperature does not change at all sensors (TK1, TK2, TK3, TK4 and TK5).

f) Clogging check for SV3F valve

- While outdoor unit is operated, set up SW01/02/03 = [2] [1] [3] (7-segment display [Hr] [... ... ...]), and push SW04 for 2 seconds or more.
- Set up SW02 = [8], and turn on SV3C, SV3E, SV3F valves. (7-segment display [Hr] [... 3 C])
- While outdoor units are operating, check temperature change at secondary side of SV3F valve. ((3) in the figure.)
  → If temperature does not rise (equivalent to suction temperature), it is a clogging of SV3F valve. Replace SV3F valve.

Check code	Check code name	Cause
[H07]	Oil level down detection protection	1. Valves of balance pipes closed. (On all outdoor units in a line) 2. Miswiring or misinstallation of TK1 to TK5 sensors 3. TK1 to TK5 sensor error 4. Gas leak or oil leak in a line 5. Refrigerant stagnation of compressor case 6. SV3A, 3B, 3C, 3D, 3E, 3F valve error 7. Clogging of oil return circuit from oil separator 8. Clogging of oil-equation circuit system

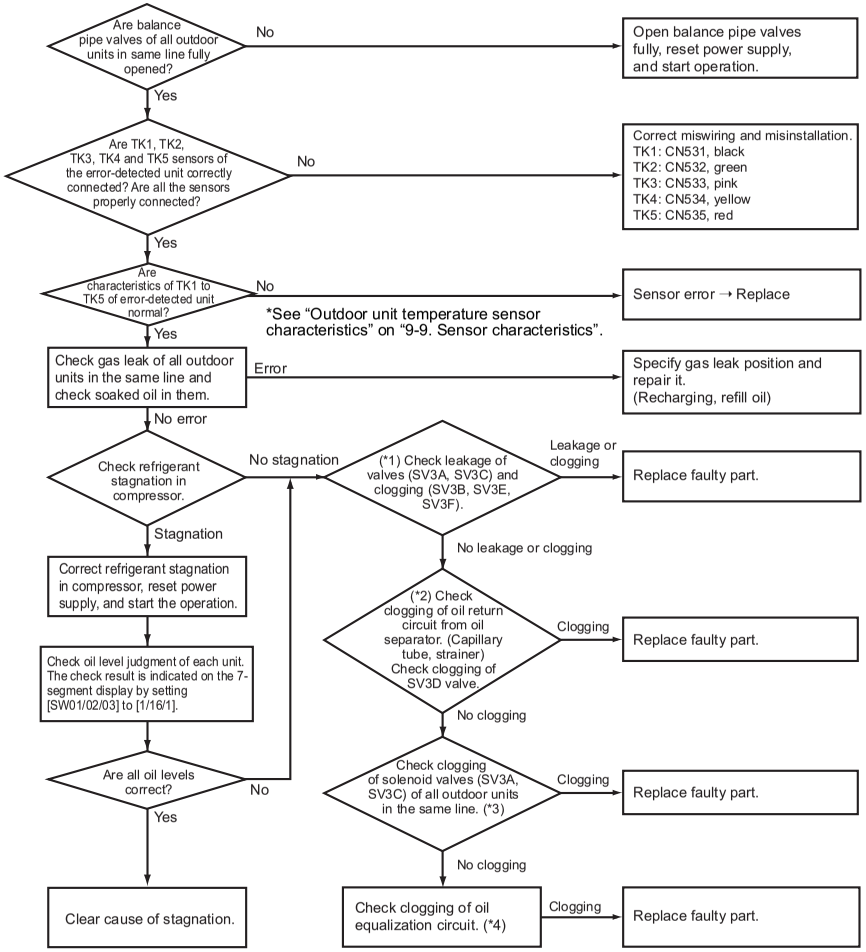

Indoor/outdoor PMV error (Cause of refrigerant stagnation), discharge check valve error, etc.

(Reference) When refrigerant stagnates in compressor shell, the oil level shortage may be

(*3) Check for solenoid valve of all outdoor units in a line (For multiple outdoor unit system)

a) Clogging check for SV3A valve

- While outdoor unit is operating, set up SW01/02/03 = [2] [1] [3] (7-segment display [Hr] [... ... ...]), and push SW04 for 2 seconds or more.
- Set up SW02 = [6], and turn on SV3A valve. (7-segment display [Hr] [... 3 A])
- If temperature is low at secondary side of the valve or it does not change, clogging of valve or check valve is considered. ((1) in the figure.)

b) Leakage check for SV3C valve

- While outdoor unit is operating, set up SW01/02/03 = [2] [1] [3] (7-segment display [Hr] [... ... ...]), and push SW04 for 2 seconds or more.
- Set up SW02 = [8], and turn on SV3C valve. (7-segment display [Hr] [... 3 C])
- If temperature does not change (up), clogging of valve or strainer is considered. ((2) in the figure.)

(*4)

a) Clogging check for oil-equalization circuit

- Drive the outdoor unit. (Drive all compressors in the unit.)
- After driving for 10 minutes or more, check whether temperature of TK1, TK2 and TK3 sensors and temperature of oil-equalization circuit capillary ((8) in the figure) has increased.
  (Criterion)
  TK1, TK2, TK3=Td1, Td2, Td3 temperature - Approx. 10 to 30°C
  Oil-equalization capillary tubes should be higher sufficiently than outside air temperature and suction temperature.
- If temperature is low, a malfunction on check valves or clogging of capillary, strainer or distributor is considered. Repair the defective parts.

MMY-MAP0724HT9UL

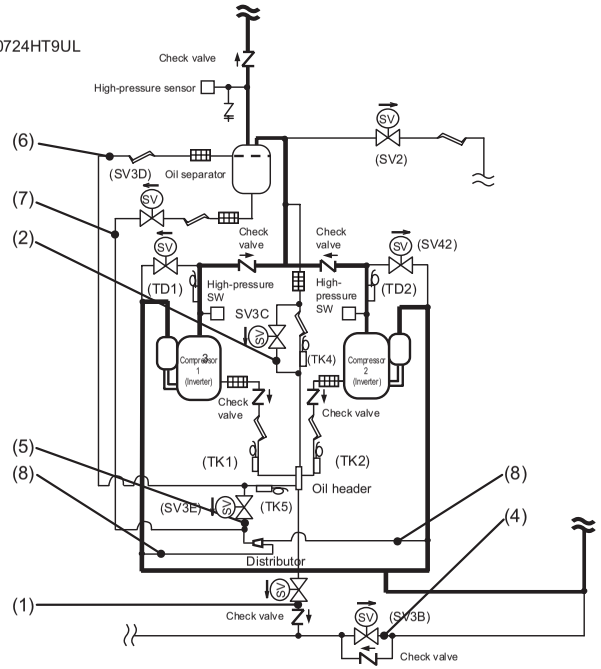

(*2) Checking the oil return circuit from oil separator and clogging in SV3D valve

a) Oil return circuit

- While outdoor unit is operating, check temperature (secondary side of capillary) on oil return circuit. ((6) in the figure.)
  → If temperature is low equivalent to suction temperature), a clogging of strainer of oil return circuit or capillary is considered. Replace the clogged part.

b) Clogging check for SV3D valve

- While outdoor unit is operated, set up SW01/02/03 = [2] [1] [3] (7-segment display [Hr] [... ... ...]), and push SW04 for 2 seconds or more.
- Set up SW02 = [9], and turn on SV3D valve. (7-segment display [Hr] [... 3 d])
- If temperature is low at secondary side of the valve or it does not change, clogging of valve, capillary, or strainer is considered. ((7) in the figure.) Replace the clogged part.

Check code	Check code name	Cause
[H08]	Oil level detective temperature sensor error	TK1 to TK5 sensor Open/Short

Sub-code:
01: TK1 sensor error 02: TK2 sensor error 03: TK3 sensor error
04: TK4 sensor error 05: TK5 sensor error

The detected error is an oil level detective temperature sensor error. Check disconnection of the wiring and resistance value of the sensor.
If the sensors are normal, replace the outdoor I/F P.C. board.

Circuit	Connector
TK1	CN531 (Black)
TK2	CN532 (Green)
TK3	CN533 (Pink)
TK4	CN534 (Yellow)
TK5	CN535 (Red)

Check code	Check code name	Cause
[H16]	Oil level detection circuit error TK1 temperature detective circuit error (Sub-code: 01)	1. Coming-off of TK1 sensor, miswiring, characteristics error of resistance value 2. Oil-equalization circuit error (Check valve, capillary clogging, strainer clogging) 3. Refrigerant stagnation in the compressor shell

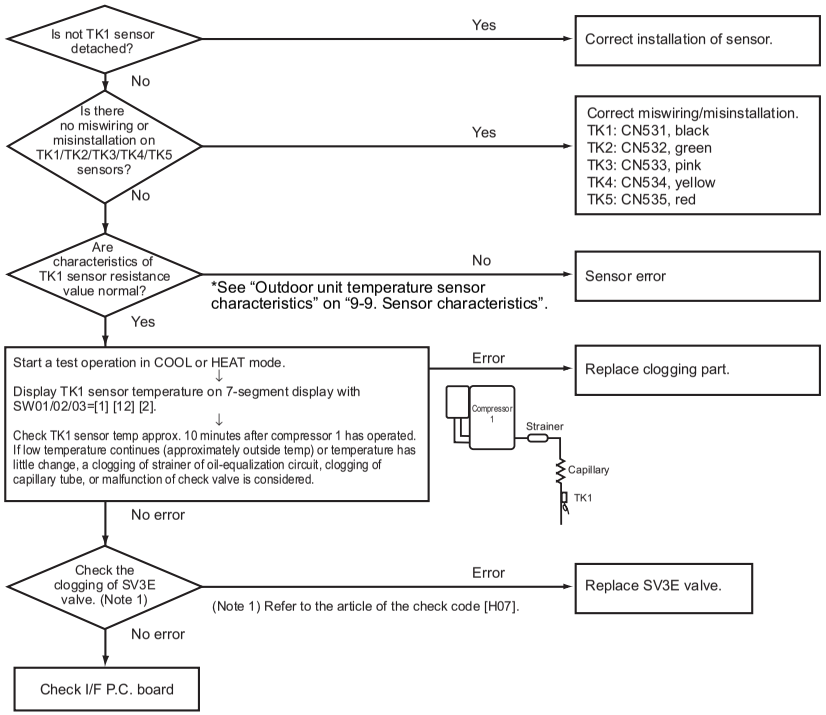

MMY-MAP0964HT9UL
MMY-MAP1144HT9UL

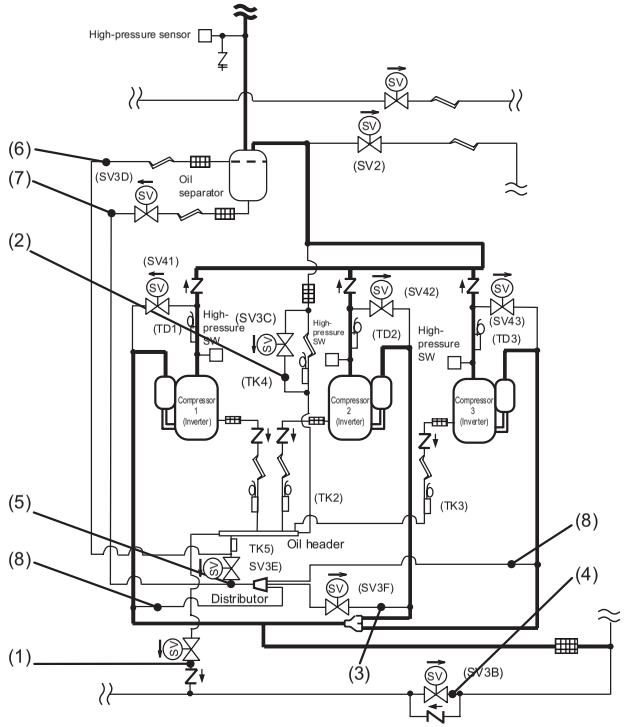

Check code	Check code name	Cause
[H16]	Oil level detection circuit error TK2 temperature detective circuit error (Sub-code: 02)	1. Coming-off of TK2 sensor, miswiring, characteristics error of resistance value 2. Oil-equalization circuit error (Check valve, capillary clogging, strainer clogging) 3. Refrigerant stagnation in the compressor shell

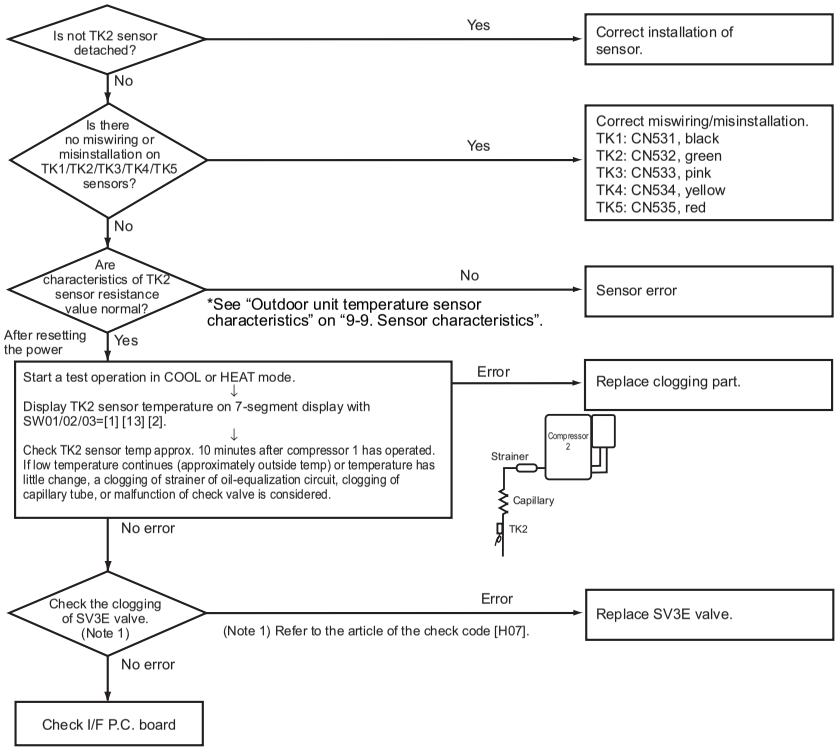

Check code	Check code name	Cause
[H15]	Outdoor discharge temperature sensor (TD2) misconnection	1. Coming-off of TD2 sensor 2. Misinstallation of TD1, TD2, or TD3 sensor, miswiring, characteristics error of resistance value

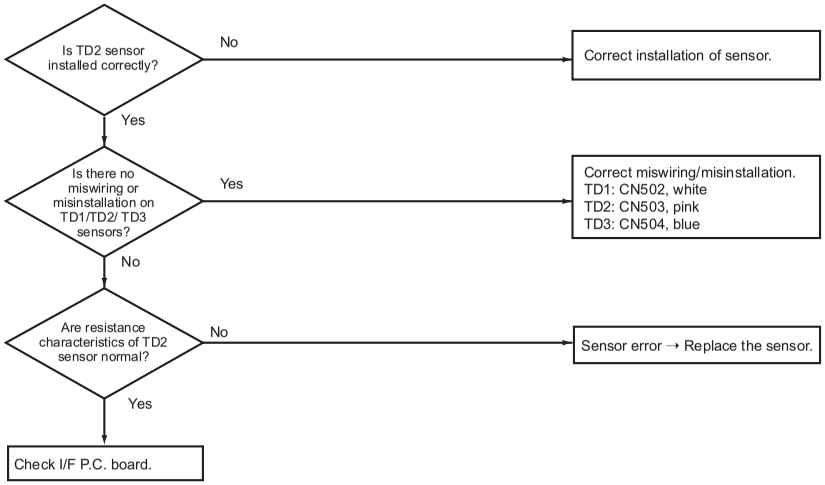

Check code	Check code name	Cause
[H16]	TK4 temperature detective circuit error (Sub-code: 04)	1. Coming-off of TK4 sensor, miswiring, characteristics error of resistance value 2. Malfunction of SV3E valve circuit (Check valve, capillary clogging, strainer clogging) 3. Refrigerant stagnation in the compressor shell

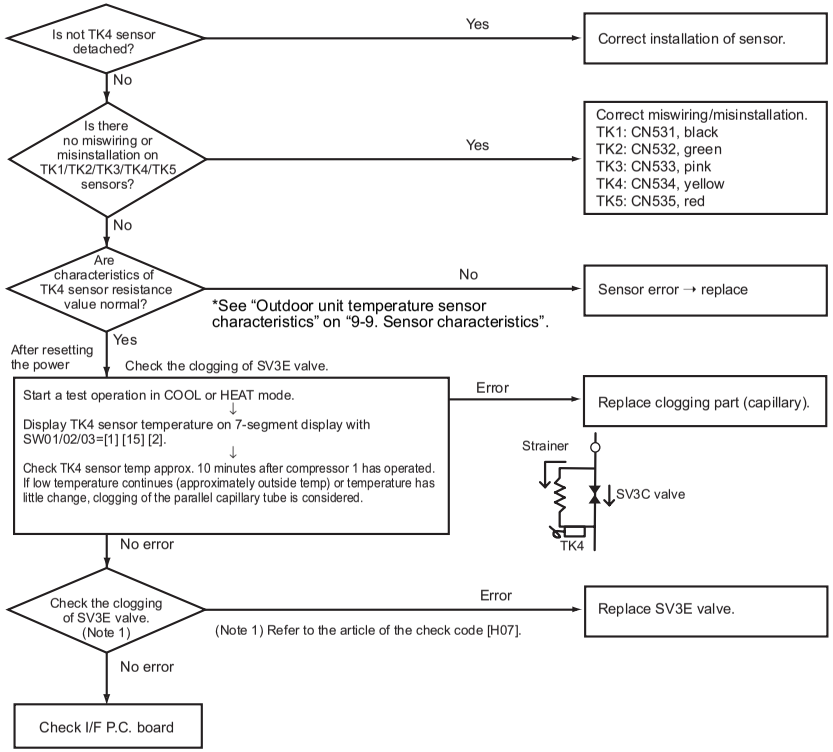

Check code	Check code name	Cause
[H16]	Oil level detection circuit error TK3 temperature detective circuit error (Sub-code: 03)	1. Coming-off of TK3 sensor, miswiring, characteristics error of resistance value 2. Oil-equalization circuit error (Check valve, capillary clogging, strainer clogging) 3. Refrigerant stagnation in the compressor shell

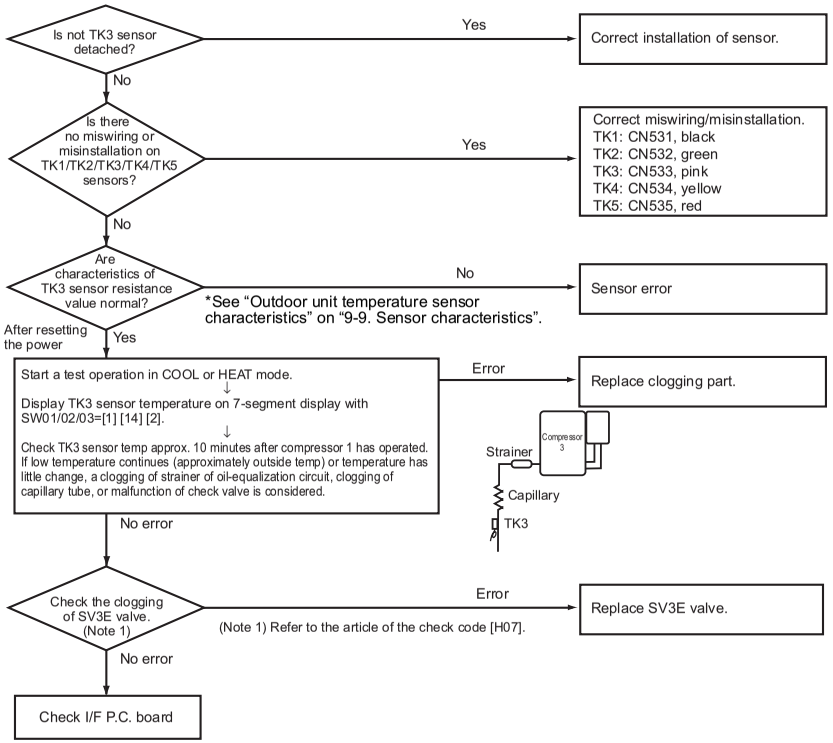

Check code	Check code name	Cause
[H25]	Outdoor discharge temperature sensor (TD3) misconnection	1. Coming-off of TD3 sensor 2. Misinstallation of TD1, TD2, or TD3 sensor, miswiring, characteristics error of resistance value

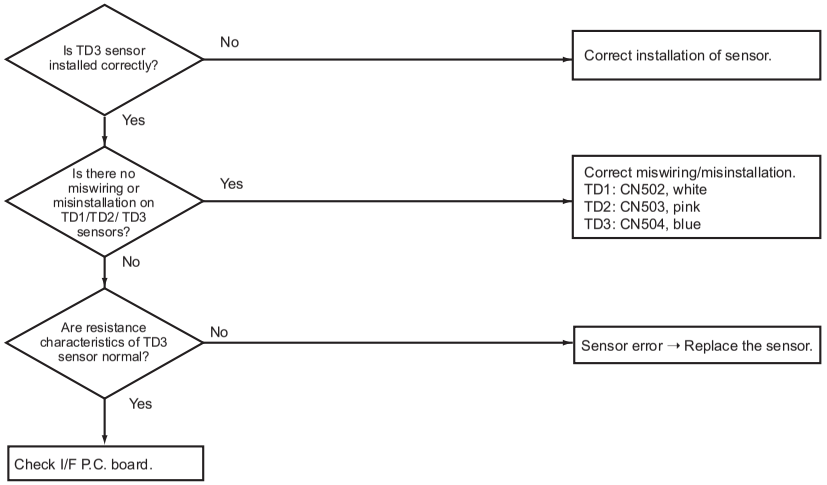

Check code	Check code name	Cause
[H16]	TK5 temperature detective circuit error (Sub-code: 05)	1. Coming-off of TK5 sensor, miswiring, characteristics error of resistance value 2. Malfunction or clogging of SV3E valve 3. Oil-equalization circuit error (Capillary or strainer clogging) 4. Refrigerant stagnation in the compressor shell

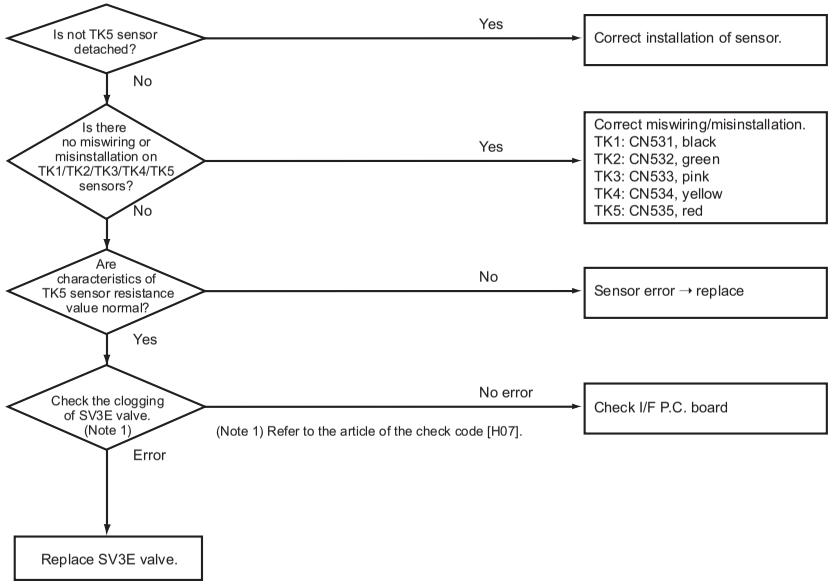

Check code	Check code name	Cause
[L06]	Duplicated indoor units with priority (Displayed on the indoor units other than ones with priority and on the outdoor unit)	Two or more indoor units with priority are duplicated.

Sub-code: ammount of indoor units with priority

When priority is given to two or more indoor units, this check code is displayed on indoor units other than the units set as prior ones and the outdoor unit.
• As only one indoor unit with priority is valid, change the setup.

Check code	Check code name	Cause
[L07]	A group line exists in an individual indoor unit	A group line is connected to an individual indoor unit.

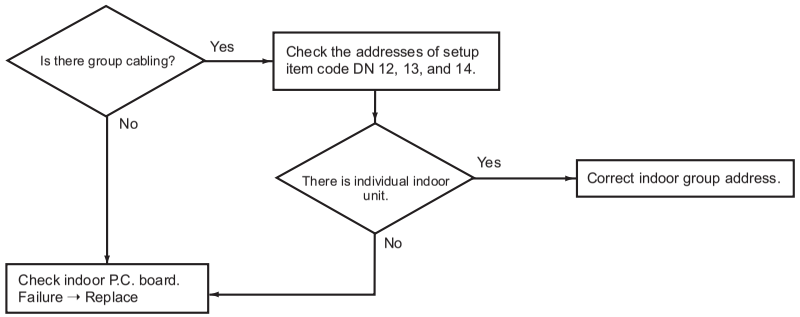

Check code	Check code name	Cause
[L03]	Duplicated indoor header units	There are two or more indoor header units in a group during group control.

1) Check whether the connection on remote controllers (group and/or individual) has been changed since the group configuration and address checking on the remote controllers finished.
2) If the group configuration and address are normal when power has been turned on, the mode automatically shifts to address setup mode. For setting up addresses again, refer to "Address setup".

Check code	Check code name	Cause
[L04]	Duplicated setup of outdoor line address	Outdoor line addresses are duplicated.

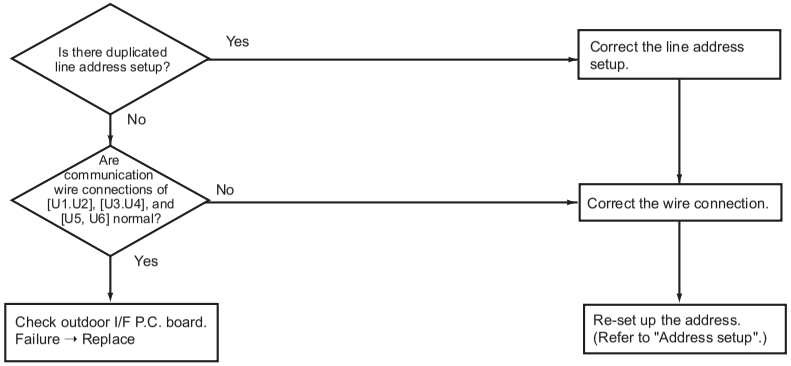

Check code	Check code name	Cause
[L05]	Duplicated indoor units with priority (Displayed on indoor unit with priority)	Two or more prior indoor units exist.

This check code is displayed on the indoor unit set as a prior one when two or more prior indoor units are detected.
• Priority setup with two or more units is not available. As only one indoor unit with priority is valid, change the setup.

Check code	Check code name	Cause
[L17]	Incompatible combination of outdoor units	An SMMS-i outdoor unit (SMMS4 series unit) and an outdoor unit of other series are connected.

Use it with another SMMS-i unit. (Heat pump model)

Check code	Check code name	Cause
[L20]	Duplicated central control addresses	Central control addresses are duplicated.

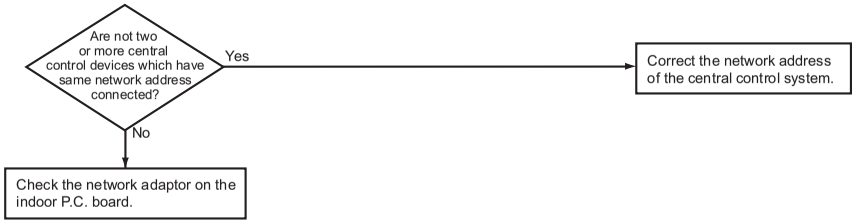

Check code	Check code name	Cause
[L28]	Quantity over of connected outdoor units	1. Quantity over of connected outdoor units. 2. Connection error of communication line between outdoor units 3. Outdoor I/F P.C. board error

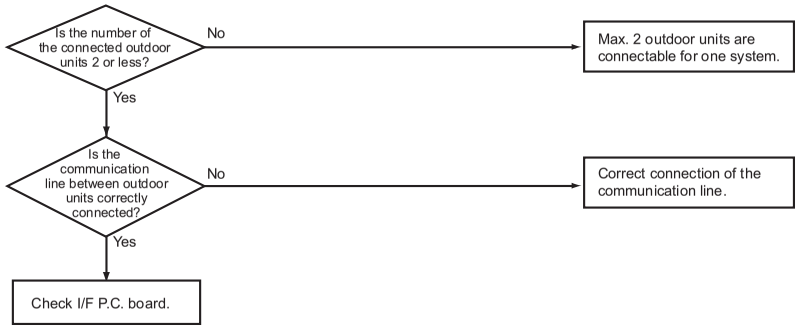

Check code	Check code name	Cause
[L08]	Indoor group / address unset	Indoor unit address is unset

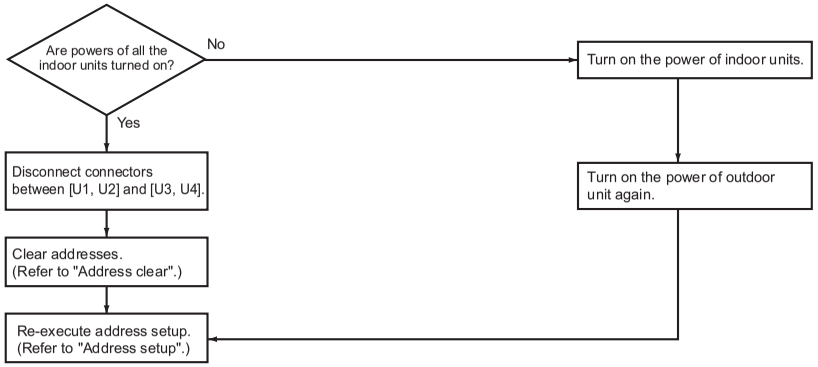

Note) This code is displayed when the power is turned on at the first time after installation. (Because the address is not yet set up)

Check code	Check code name	Cause
[L09]	Indoor capacity unset	Indoor unit's capacity is unset

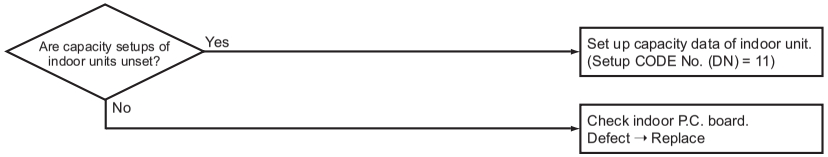

Check code	Check code name	Cause
[L10]	Outdoor capacity unset	On the outdoor IF P.C. board for service, the model selecting jumper has not been set up so as to match with the model.

I/F P.C. board A'ssy service for the outdoor unit is common to this series. A setup for model selection different from that for P.C. board with trouble is necessary. Set up a model based upon the P.C. board A'ssy exchange procedure.

Check code	Check code name	Cause
[L30]	Interlock in indoor unit from outside	Abnormal input from the outside

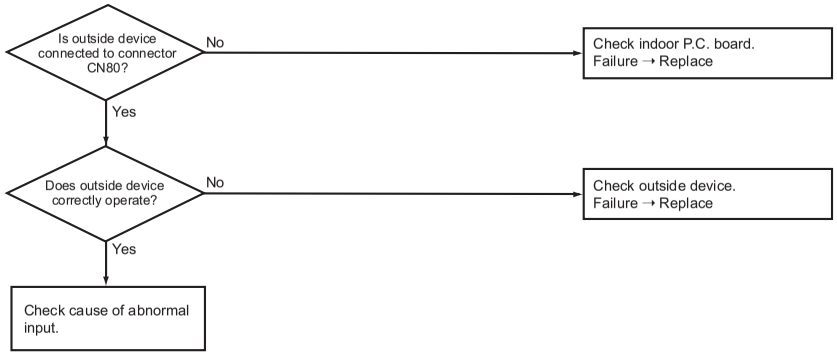

Check code	Check code name	Cause
[L31]	Other IPDU errors	1. Outdoor unit power error 2. Outdoor I/F P.C. board error

Check code	Check code name	Cause
[P01]	Indoor fan motor error	1. Wiring error 2. Check fan motor.

* For the models equipped with AC fan motor only

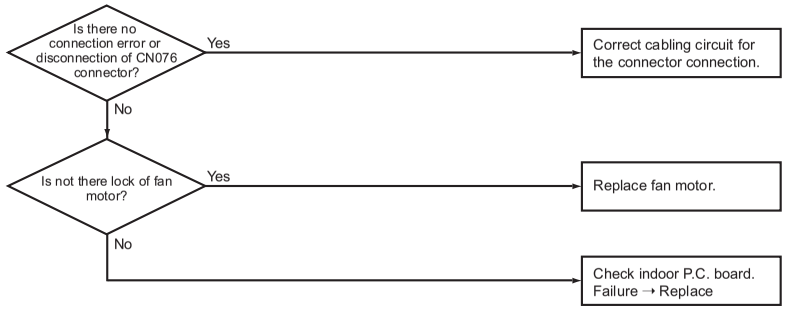

Check code	Check code name	Cause
[L29]	IPDU quantity error	1. Incorrect model setup in service for I/F P.C. board 2. Communication error between A3-IPDU, fan IPDU and I/F 3. A3-IPDU, fan IPDU, I/F P.C. board error

Sub-code

	A3-IPDU 1	A3-IPDU 2	A3-IPDU 3	Fan IPDU		A3-IPDU 1	A3-IPDU 2	A3-IPDU 3	Fan IPDU
01	O				0A		O		O
02		O			0B	O	O		O
03	O	O			0C			O	O
04			O		0D	O		O	O
05	O		O		0E		O	O	O
06		O	O		0F	O	O	O	O
07	O	O	O						
08				O					
09	O			O					

O: IPDU error part

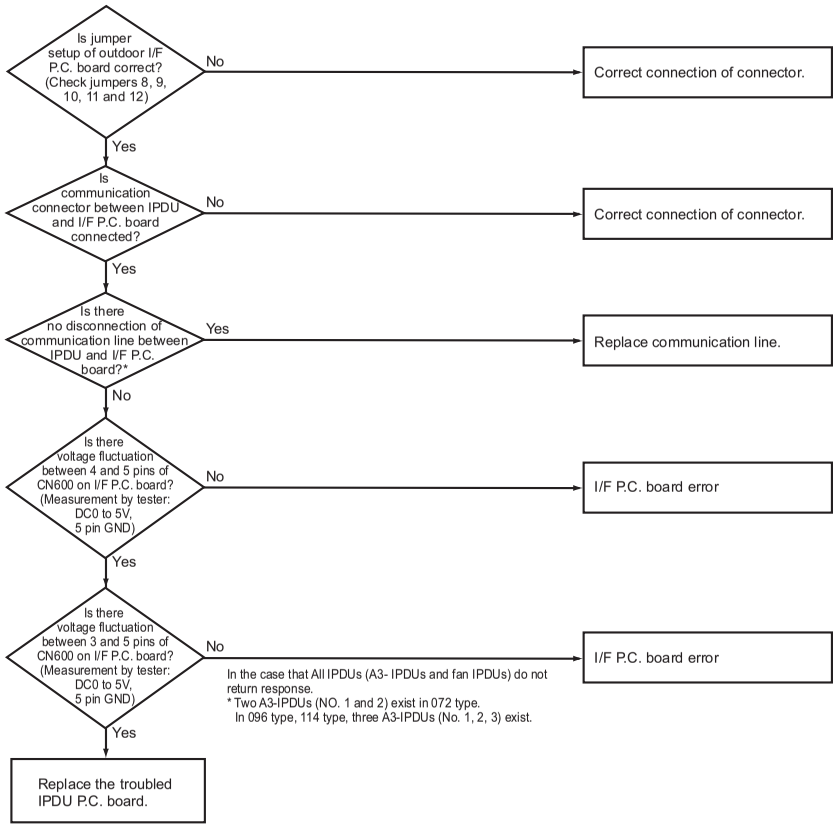

Check code	Check code name	Cause
[P04]	Error concerning high-pressure SW	1. High-pressure SW error 2. Service valve closed 3. Pd sensor error 4. Indoor/outdoor fan error 5. Indoor/outdoor PMV choke 6. Indoor/outdoor heat exchanger clogging, air short circuit 7. SV2 circuit error 8. SV4 circuit error 9. SV5 circuit error 10. Discharge line check valve malfunction 11. Refrigerant overcharge

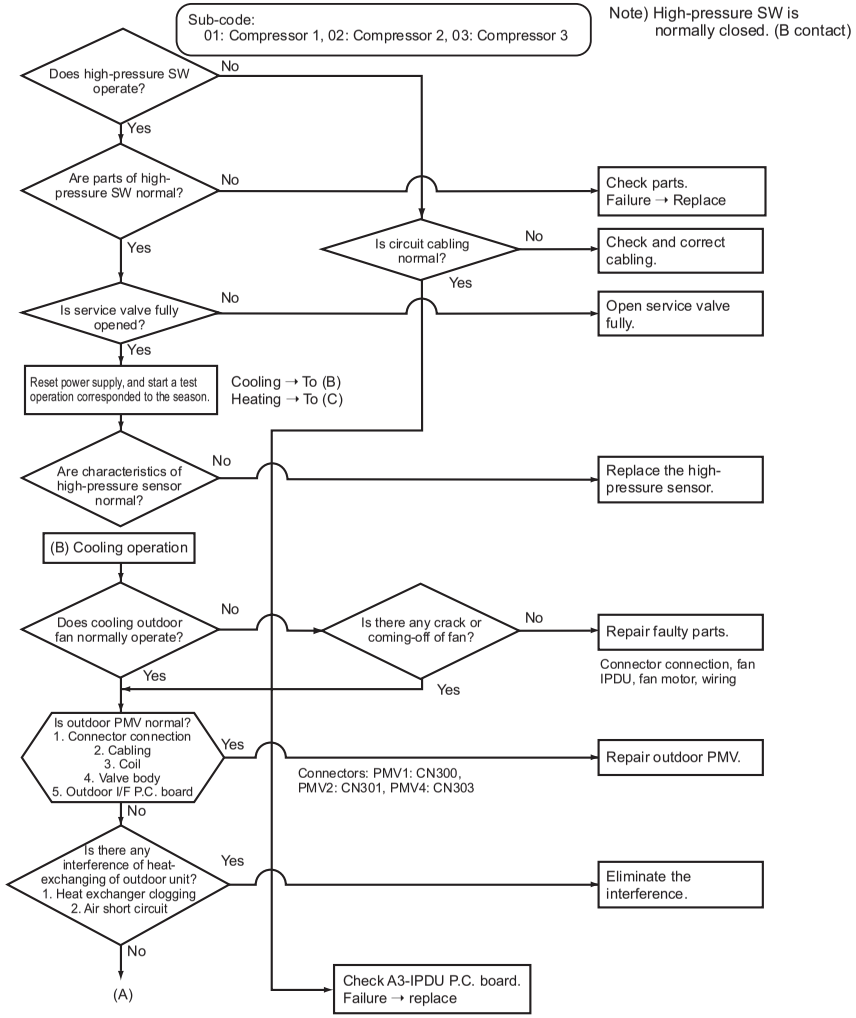

Check code	Check code name	Cause
[P03]	Discharge temp TD1 error	1. Service valve of outdoor unit closed 2. Outdoor PMV error 3. TD sensor error 4. Refrigerant shortage, clogging of refrigerant piping 5. 4-way valve error 6. SV4 circuit leakage, misinstallation

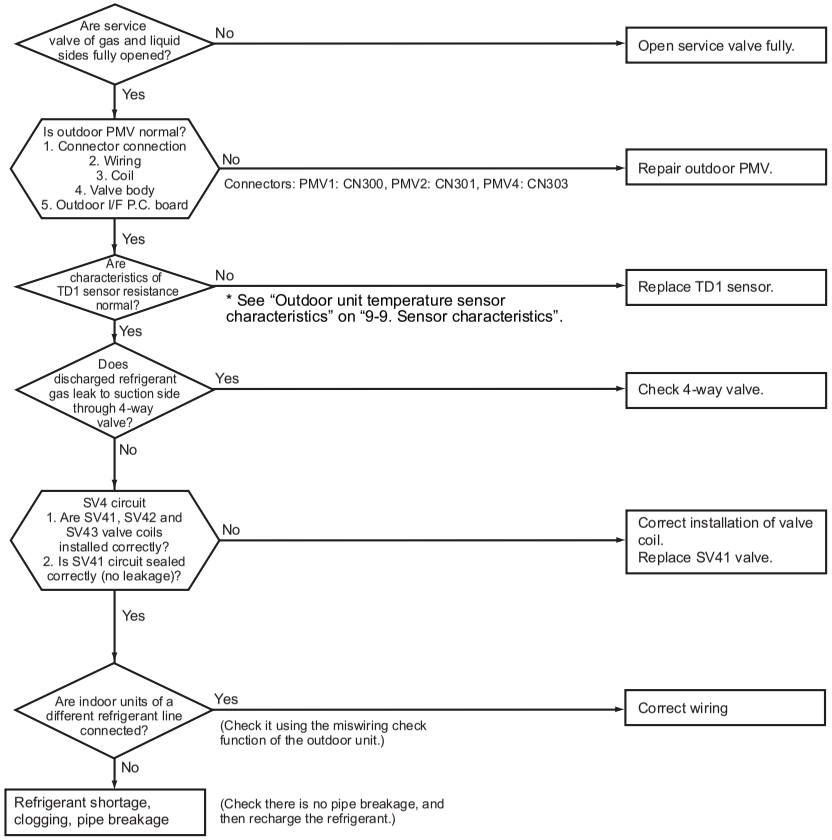

Check code	Check code name	Cause
[P05]	Phase error detected, power failure detected, abnormal inverter DC voltage (on compressor)	Phase error or power failure of the power supply to the outdoor unit

Sub-code: 00: Phase error/power failure is detected. 01: Abnormal inverter DC voltage on Compressor 1,
02: Abnormal inverter DC voltage on Compressor 2, 03: Abnormal inverter DC voltage on Compressor 3

- Check the phase of the power line to the outdoor unit.
- Check error of outdoor I/F P.C. board.
- Check there are no loosened connectors, etc.
- Check connection wiring of MG-CTT.
- Check operation of MG-CTT.

Check code	Check code name	Cause
[P07]	Heat sink overheat error	1. Power voltage error 2. Outdoor fan system error 3. Heat sink installation error 4. Clogging of the cooling duct for the heat sink 5. A3-IPDU P.C. board error

Sub-code:
01: Compressor 1,
02: Compressor 2,
03: Compressor 3

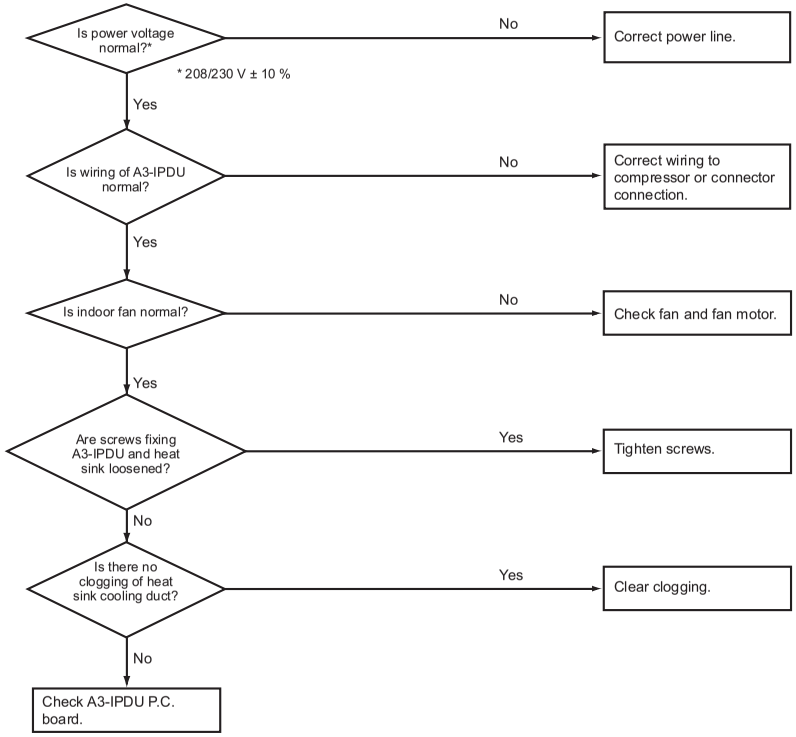

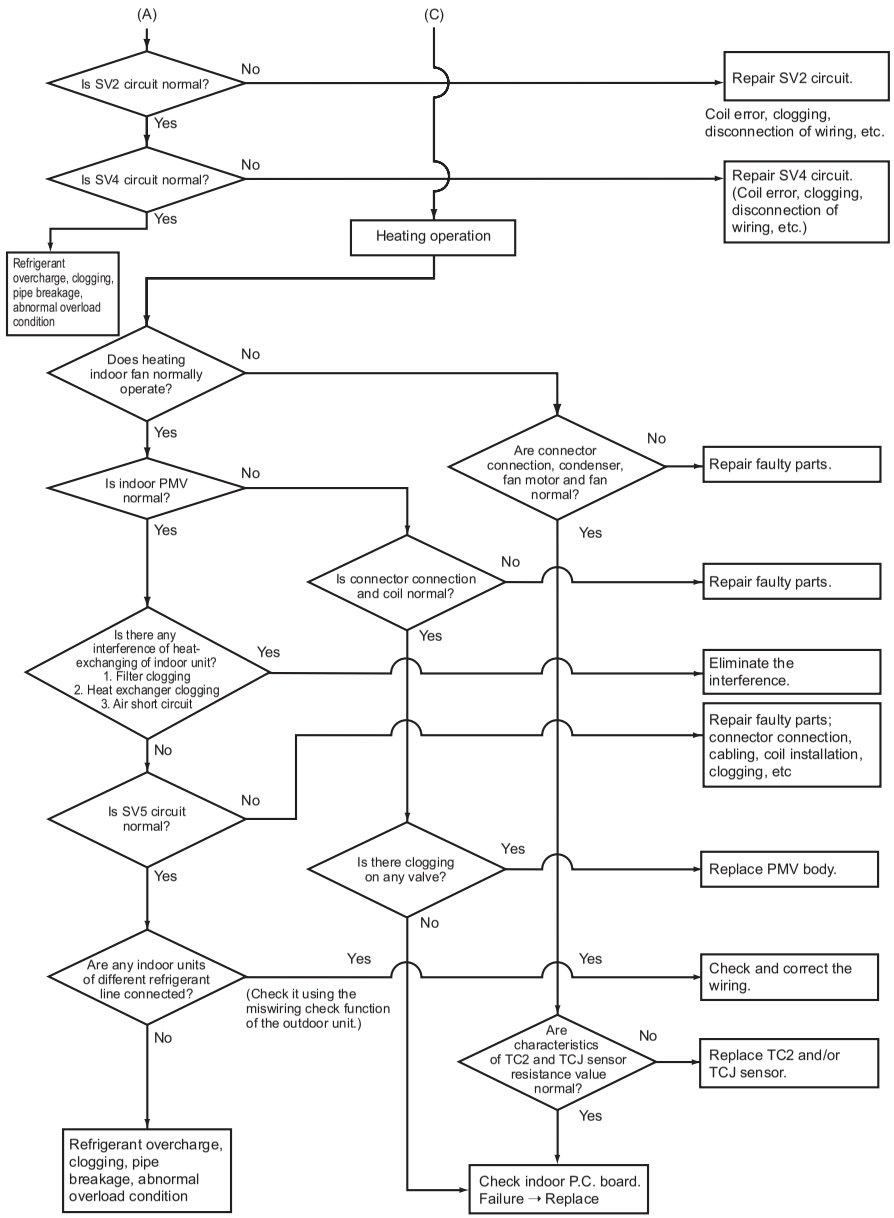

Check code	Check code name	Cause
[P12]	Indoor fan motor error	1. Wiring error of fan motor connector 2. Fan motor error 3. Indoor P.C. board error

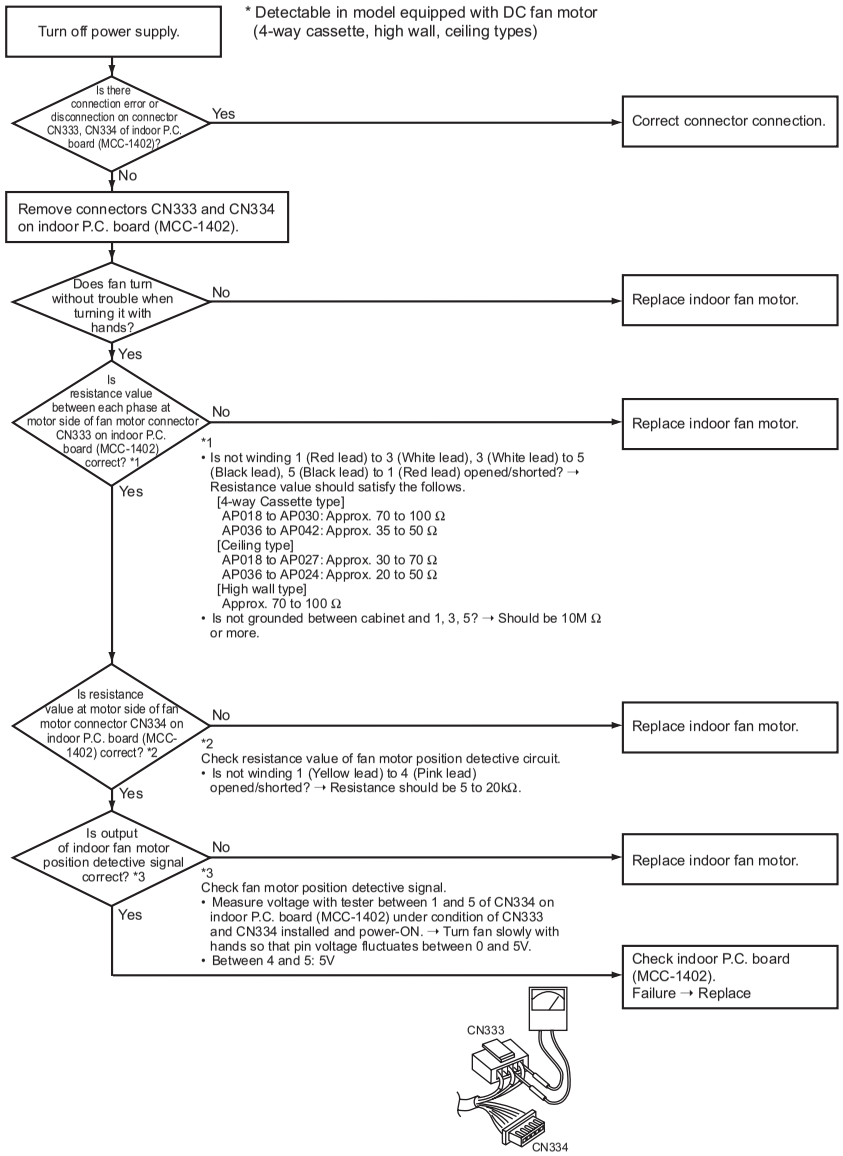

Check code	Check code name	Cause
[P10]	Water overflow in an indoor unit	1. Float SW malfunction 2. Drain pump malfunction 3. Clogging of drain pipe 4. Indoor P.C. board error

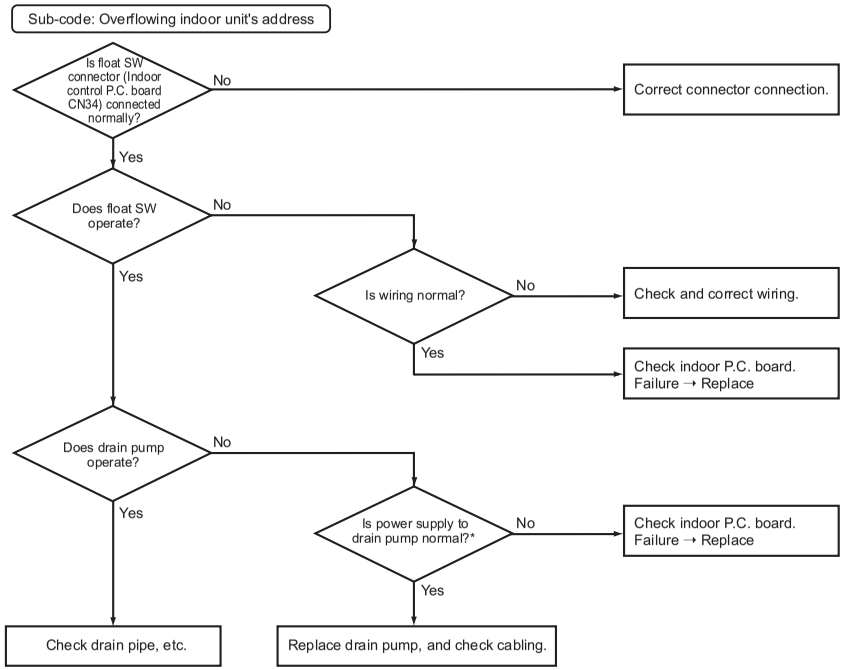

* Check there is 220-240V voltage of 1-3 pin of CN68 on indoor P.C. board.

Check code	Check code name	Cause
[P15]	Gas leak detection TS condition (Sub-code: 01)	1. Outdoor unit service valve closed 2. Outdoor PMV error 3. TS1 sensor error 4. Refrigerant shortage, clogging refrigerant circuit 5. 4-way valve error 6. SV4 circuit error

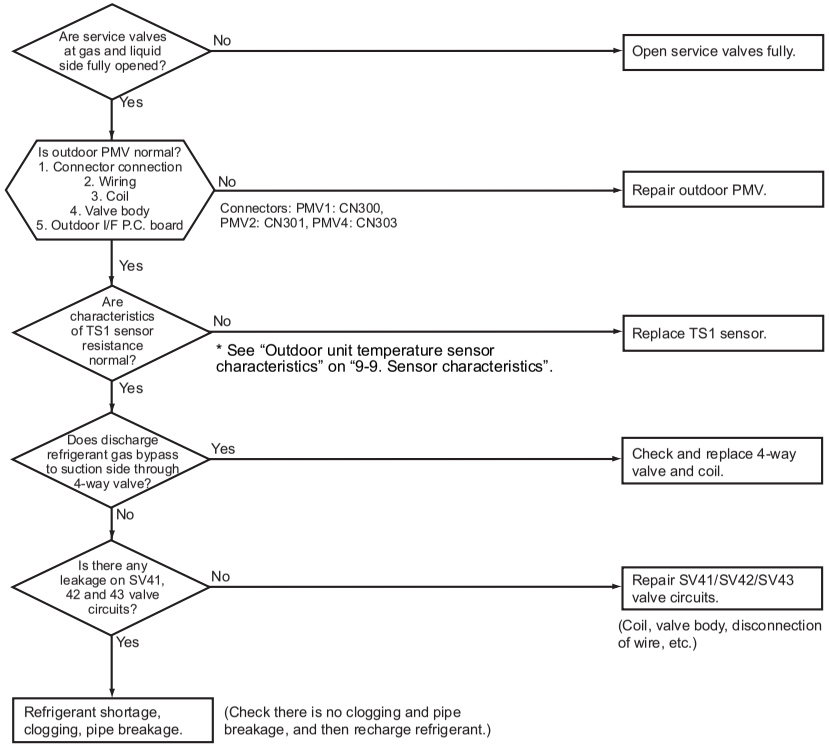

Check code	Check code name	Cause
[P13]	Outdoor liquid back detection error	1. PMV1/PMV2 error 2. Pd sensor, Ps sensor error 3. Clogging of SV2 circuit 4. Clogging of SV3B circuit and/or balance pipe 5. Leakage at a check valve on a main discharge pipe 6. Outdoor I/F P.C. board error

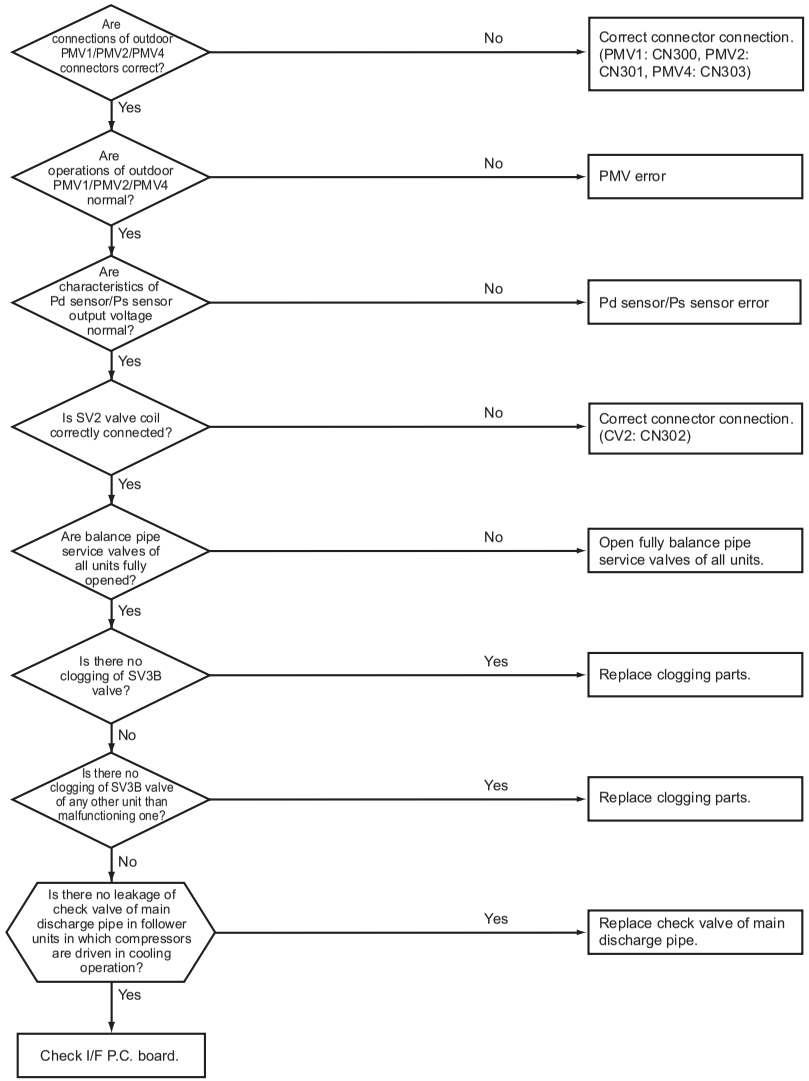

Check code	Check code name	Cause
[P17]	Discharge temp TD2 error	1. Outdoor unit service valve closed 2. Outdoor PMV error 3. TD sensor error 4. Refrigerant shortage, clogging of refrigerant circuit 5. 4-way valve error 6. SV4 circuit leakage, misinstallation

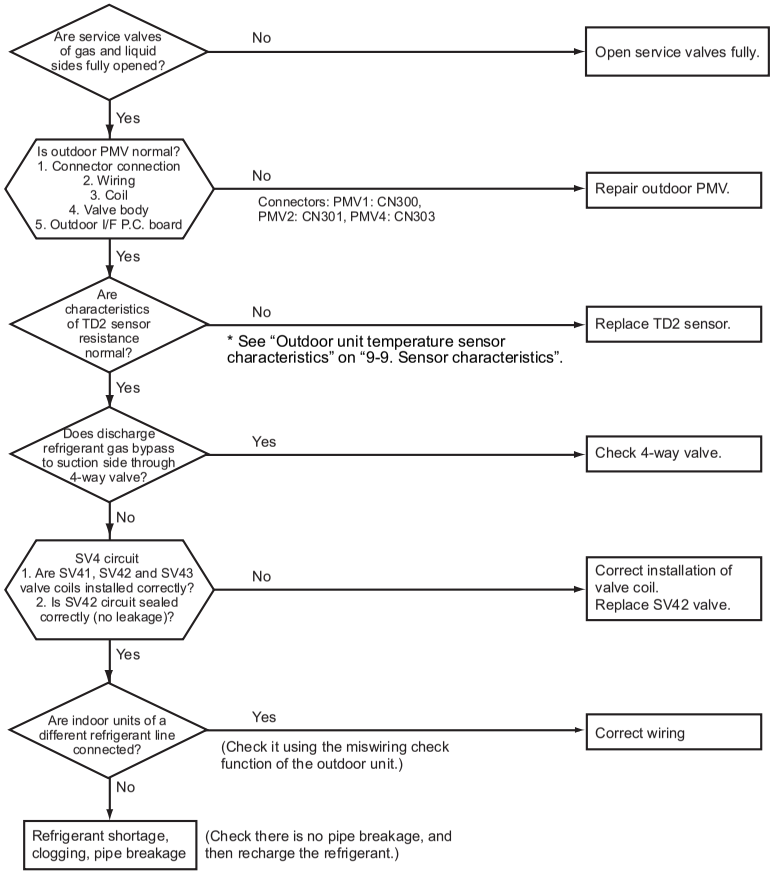

Check code	Check code name	Cause
[P15]	Gas leak detection TD condition (Sub-code: 02)	1. Outdoor unit service valve closed 2. Outdoor PMV error 3. TD sensor error 4. SV4 circuit error 5. Refrigerant shortage, clogging refrigerant circuit

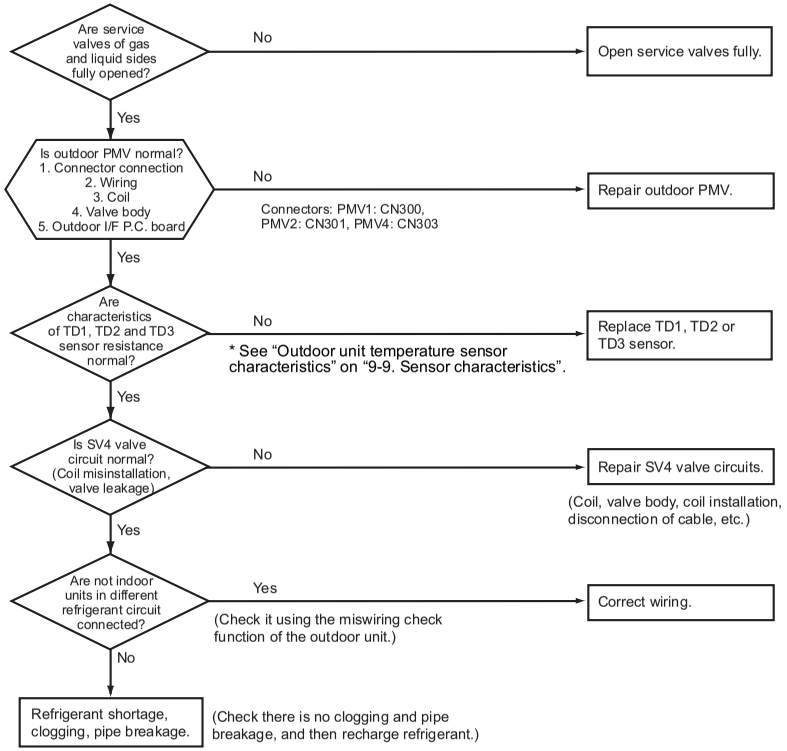

Check code	Check code name	Cause
[P19]	4-way valve reverse error	1. 4-way valve error 2. TS1 sensor/TE1 sensor error 3. Pd sensor/Ps sensor error 4. TE sensor/TL sensor misconnection

Sub-code: Detected outdoor unit No.

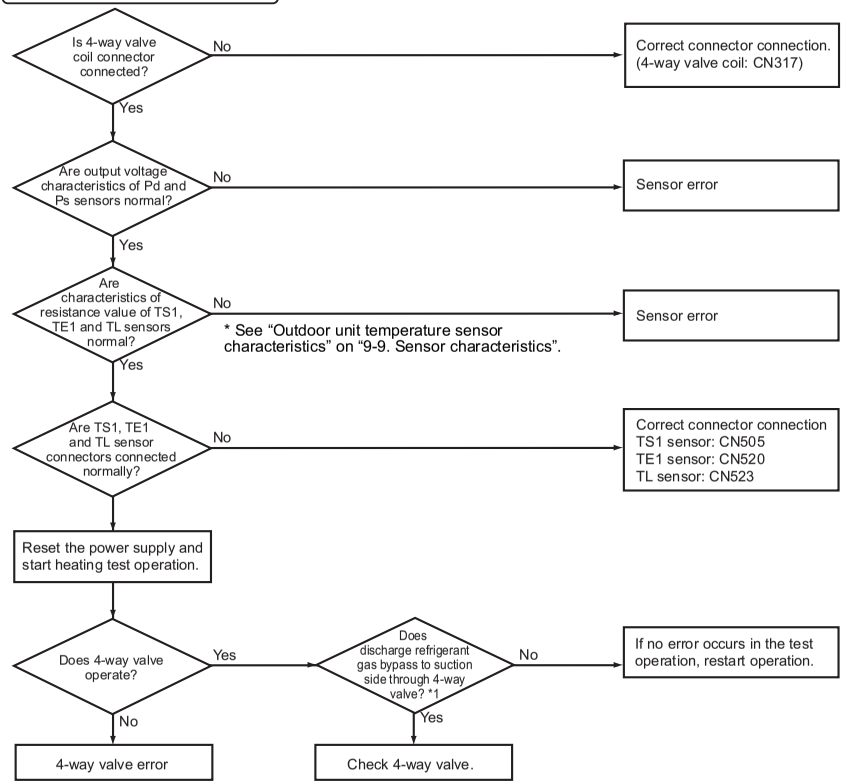

*1 Check TS1 and TE1 temperature of the outdoor unit which is running.
(I/F) SW01=[1], SW02=[6], SW03=[2] → TS sensor temperature
SW01=[1], SW02=[7], SW03=[2] → TE sensor temperature
<Judgment criteria>
TE1 sensor: Normal if TE1 is 30°C or less in the seasons except summer (Outside temp 20°C or lower)
TS1 sensor: Normal if TS is 50°C or less in the seasons except summer (Outside temp 20°C or lower)

Check code	Check code name	Cause
[P18]	Discharge temp TD3 error	1. Outdoor unit service valve closed 2. Outdoor PMV error 3. TD sensor error 4. Refrigerant shortage, clogging of refrigerant circuit 5. 4-way valve error 6. SV4 circuit leakage, misinstallation

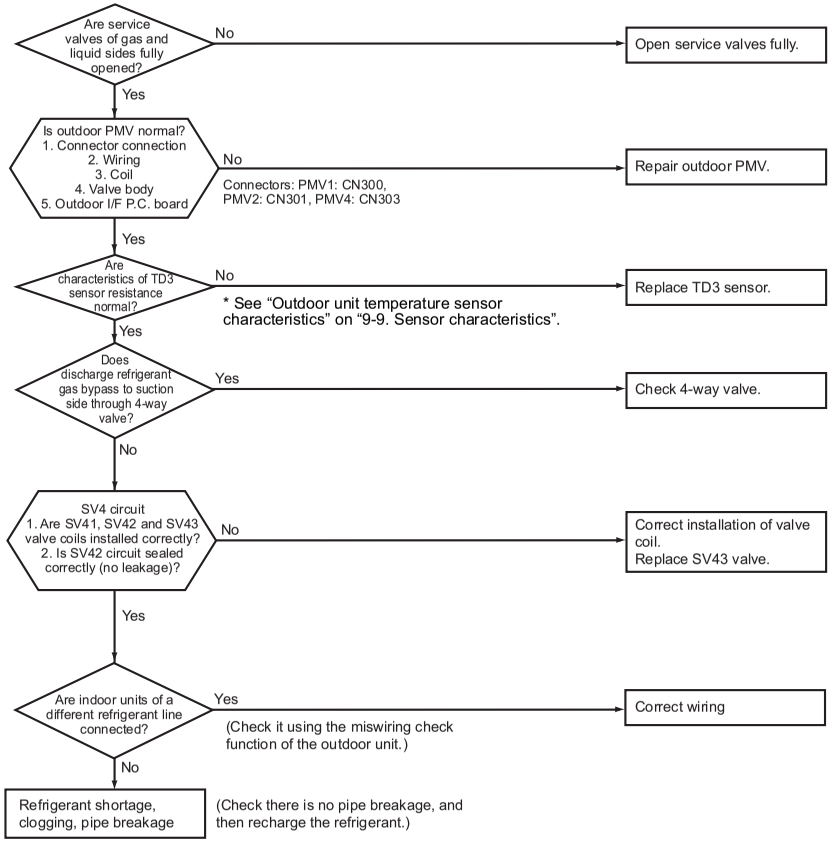

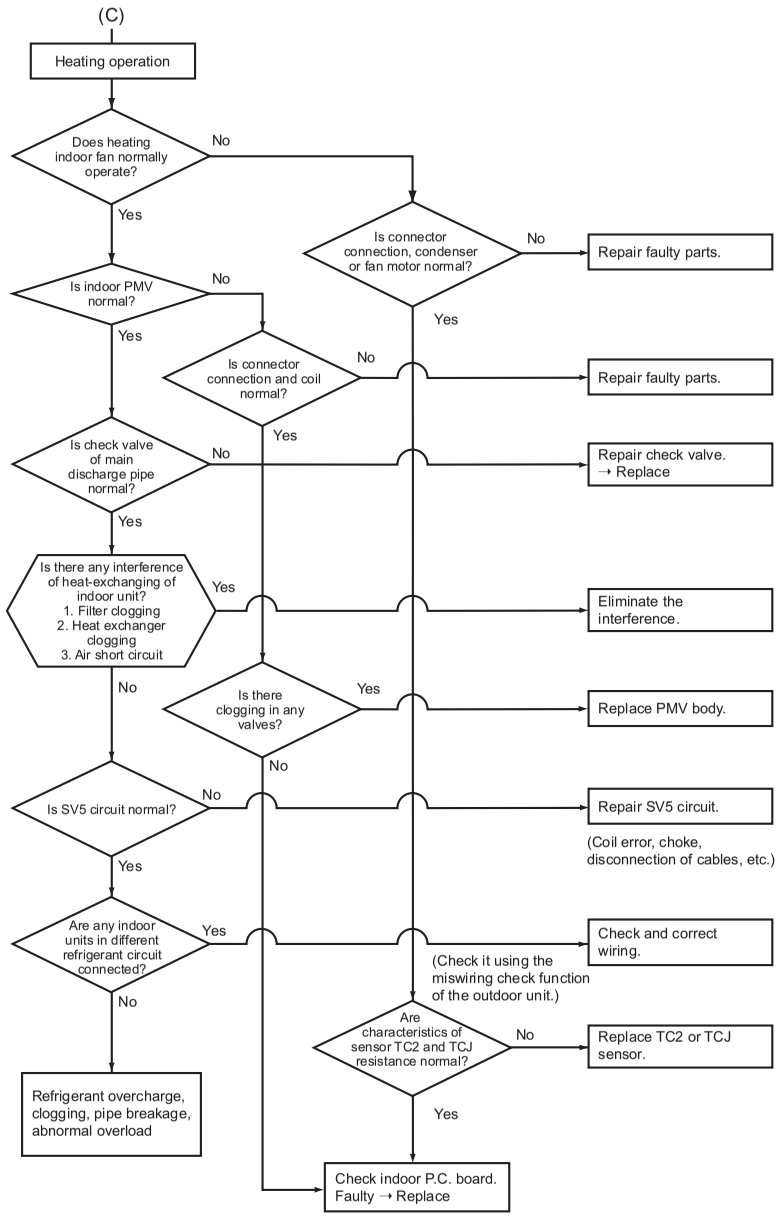

Check code	Check code name	Cause
[P20]	High-pressure protective operation	1. Pd sensor error 2. Service valve closed. 3. Indoor/outdoor fan error 4. Indoor/outdoor PMV clogging 5. Indoor/outdoor heat exchanger clogging 6. SV2 circuit error 7. SV4 circuit error 8. SV5 circuit error 9. Outdoor I/F P.C. board error 10. Operation error of check valve of main discharge pipe 11. Refrigerant overcharge

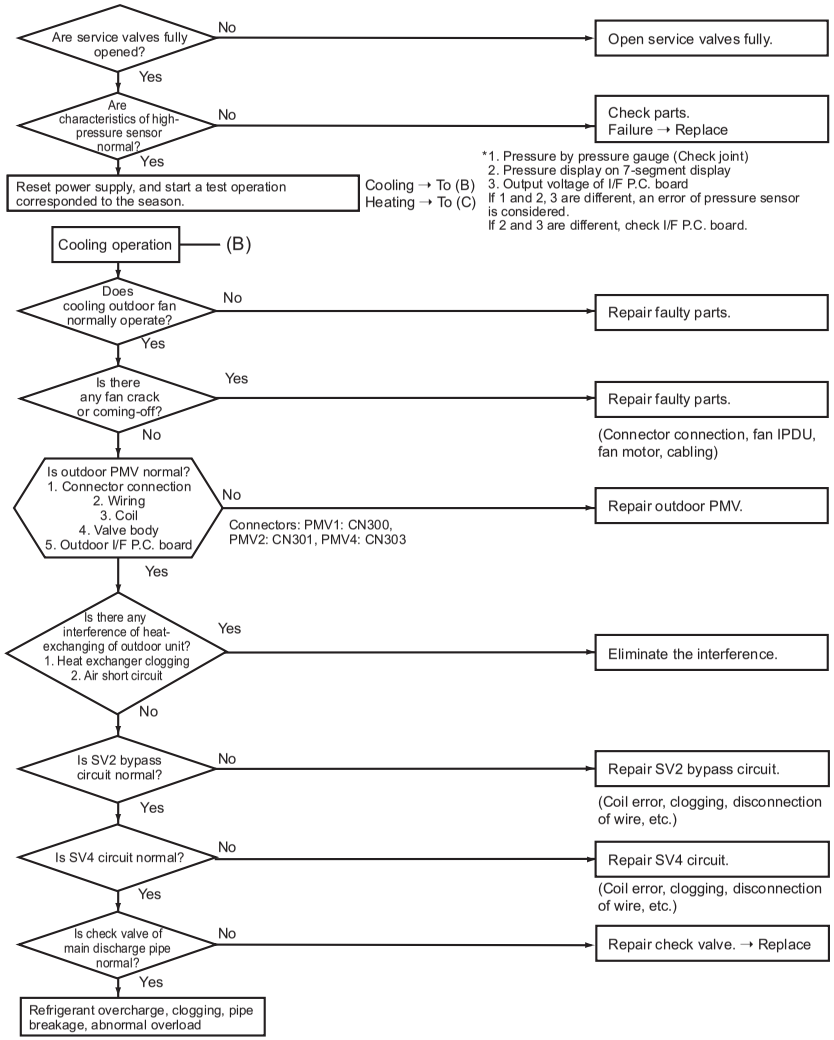

Check code	Check code name	Cause
[P26]	G-Tr short-circuit protection error	1. Outdoor unit power error 2. IPDU error/Wire connection error 3. Compressor error 4. IPDU P.C. board error

Sub-code:
01: Compressor 1, 02: Compressor 2, 03: Compressor 3

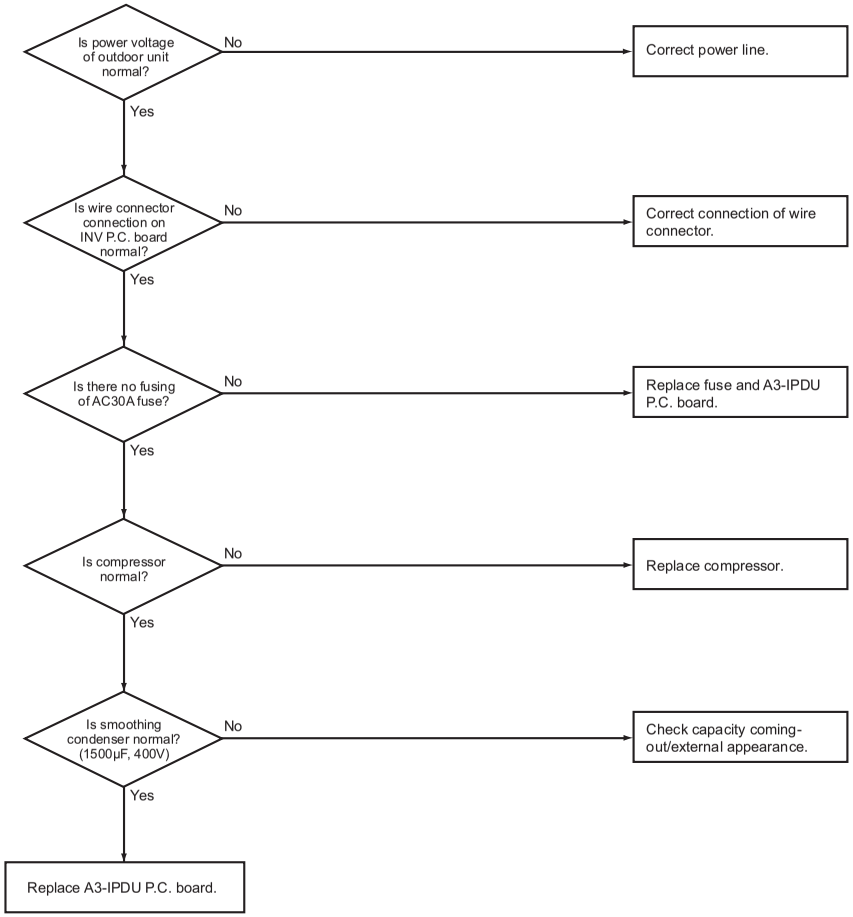

Check code	Check code name	Cause
[P22]	Outdoor fan IPDU error	1. Fan lock 2. Fan IPDU P.C. board error 3. Overload 4. External cause such as blast

Sub-code:
0*: IGBT short circuit
1*: Position detection circuit error
3*: Motor lock
4*: Motor current error detected
C*: TH sensor temperature error
D*: TH sensor error
E*: Fan Vdc error
Ignore the indication (0-F) on "*" digit.

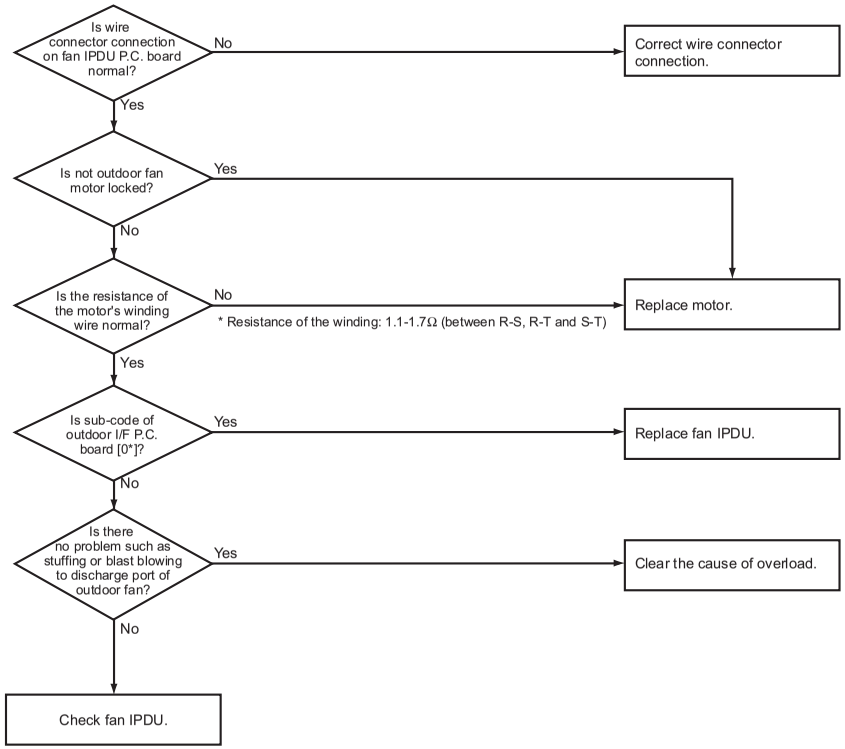

Check code	Check code name	Cause
[P29]	Compressor position detective circuit error	1. Wire/connector connection error 2. Compressor error 3. A3-IPDU P.C. board error

Sub-code:
01: Compressor 1, 02: Compressor 2, 03: Compressor 3

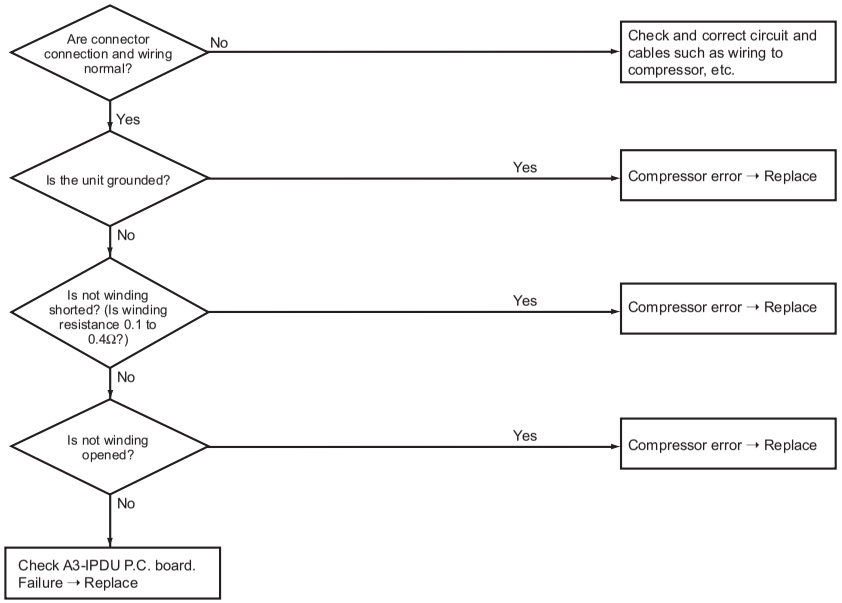

Check code	Check code name	Cause
[P31]	Other indoor error (Group follower unit error)	Another indoor unit in the group is abnormal.

When the header unit of the group detected error [E03], [L03], [L07] or [L08], the follower unit of the group displays [P31] error and stops. There are no check code display and alarm record of the main remote controller.

9-6. 7-segment display function

7-segment display on outdoor unit (interface P.C. board)

The interface control P.C. board features a 7-segment LED display designed to check operational status. Display items can be changed by changing the combination of the number settings of rotary switches provided on the P.C. board (SW01, SW02 and SW03).

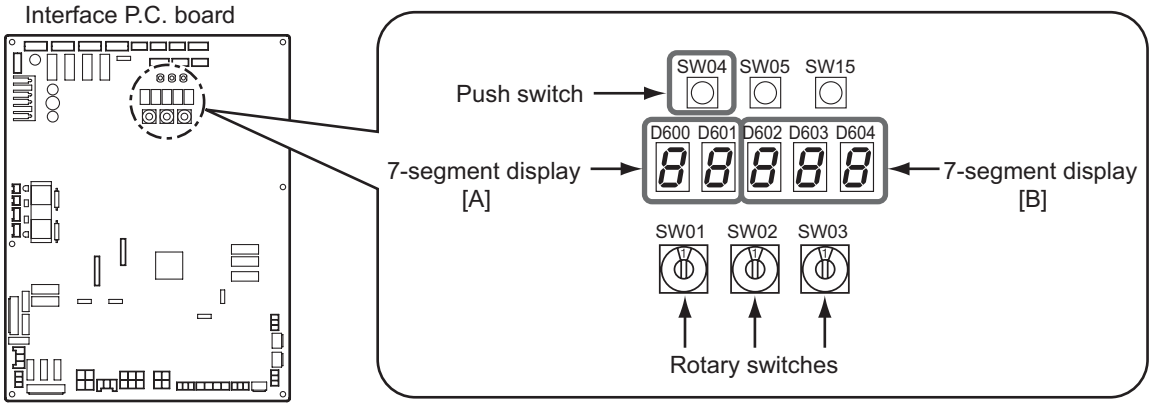

Checking Procedure to Be Followed in Event of Abnormal Shutdown

If the system is shut down due to an error in the outdoor unit, perform checks in the following steps:

1 Open the panel of the outdoor unit and inspection window of the electric parts box, and check the 7-segment display.

The check code is displayed in the right-hand section of the 7-segment display [B].

[U1] [OOO] ([OOO]: Check code)

* To check the check code, set the rotary switches SW01/SW02/SW03 to [1/1/1].
If there is a sub-code, the display alternates between the check code [OOO] (3 seconds) and the sub-code [OOO] (1 second).

2 Check the check code and follow the applicable diagnostic procedure.

3 If the 7-segment display shows [U1] [E28], there is an error in a follower unit.

Press the push-switch SW04 on the header unit and hold for several seconds.

As the fan of the outdoor unit in which the error has occurred comes on, open the panel of the unit, and check the check code shown on the 7-segment display.

4 Perform checks in accordance with the diagnostic procedure applicable to the check code.

(1) Display of System Information (Displayed on Header Outdoor Unit Only)

SW01	SW02	SW03	Display detail				
1	1	3	Unused			A	B
	2		System capacity	A	[…6]~[10]:6 to 20 ton		
				B	[ton]		
	3		No. of outdoor units	A	[…1]~[…2]:1 to 2		
				B	[…P]		
	4		No. of indoor units connected / No. of units with cooling thermo ON	A	[…0.]~[48.]:0 to 48 (No. of units connected)		
				B	[C…0]~[C48]:0 to 48 (No. of units with cooling thermo ON)		
	5		No. of indoor units connected / No. of units with heating thermo ON	A	[…0.]~[48.]:0 to 48 (No. of units connected)		
				B	[H…0]~[H48]:0 to 48 (No. of units with heating thermo ON)		
	6		Amount of compressor command correction	A	Value displayed in hexadecimal format		
				B			
	7		Release control	A	Normal: [r. …], During release control: [r.1]		
				B	–		
	8		Oil equalization control		Normal: [oiL-0]		
					During oil equalization control: [oiL-1]		
	9		Oil equalization request	A	Displayed through LED segment lighting pattern		
				B	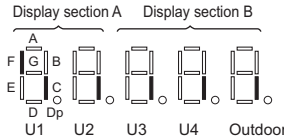 If element F shown on sketch at right turned on: Header unit oil equalization request If element C shown on sketch at right turned on: Follower unit oil equalization request		
	10		Refrigerant/oil recovery operation	A	Oil recovery in cooling: [C1], Normal: [C …]		
				B	Refrigerant recovery in heating: [H1], Normal: [H …]		
	11		Automatic addressing	A	[Ad]		
				B	During automatic addressing: [… FF], Normal: [… … …]		
	12		Power pick-cut	A	[dU]		
				B	Normal: [… … …], During 50-90% capacity operation: [_50-_90] While control is based on BUS line input: [E50-E90]		
	13		Optional control (P.C. board input)		Displays optional control status	A	B
					Operation mode selection: During priority heating (normal)	h.∗.	∗.∗.∗.
					Priority cooling	c.∗.	∗.∗.∗.
					Heating only	H.∗.	∗.∗.∗.
					Cooling only	C.∗.	∗.∗.∗.
					Priority given to No. of indoor units in operation	n.∗.	∗.∗.∗.
					Priority given to specific indoor unit	U.∗.	∗.∗.∗.
					External master ON/OFF: Normal	∗…..	∗.∗.∗.
					Start input	∗.1.	∗.∗.∗.
					Stop input	∗.0.	∗.∗.∗.
					Night operation: Normal	∗.∗.	….∗.∗.
					Start input	∗.∗.	1.∗.∗.
					Snowfall operation: Normal	∗.∗.	∗…..∗.
					Start input	∗.∗.	∗.1.∗.
	14		Optional control (BUS line input)		Same as above		
	15		Unused				
	16		–	A	–		
				B	–		

(2) Display of Outdoor Unit Information (Displayed on Each Outdoor Unit)

SW01	SW02	SW03	Display detail				
1	1	1	Error data	A	Outdoor unit No.: [U1] to [U4]		
				B	Check code (only latest one displayed) If there is no check code, [– – –] is displayed. If there is sub-code, check code [∗ ∗ ∗] and sub-code [– ∗ ∗] are displayed alternately, for 3 seconds and 1 second, respectively.		
			<SW04> push SW function: Fan operation at outdoor unit with error. 7-segment display section A: [E.1] <SW04 + SW05> push SW function: Fan operation at outdoor unit without error. 7-segment display section A: [E.0] <SW05> push SW function: Fan operation function check mode is cancelled.				
	2		–	A	–		
				B	–		
	3		Operation mode	A	Stop [… …] Normal cooling: [… C], Normal heating: [… H], Normal defrosting: [… J]		
				B	–		
	4		Outdoor unit capacity	A B	6 ton to 10 ton [... ... 6. 0 t.] to [... 1 0. 0 t.] A B A B		
	5		Compressor operation command		* Operation data of each compressor is displayed in turn in 2 second intervals. If compressor No. 3 does not exist, [– –.– – –] is displayed.		
			Normal: Compressor speed (rps) is displayed in decimal format. 7-segment display (A/B): [C1.∗ ∗ ∗] ⇒ [C2.∗ ∗ ∗] ⇒ [C3.∗ ∗ ∗] ⇒ ...				
			<SW04> push SW function: Switches to display of operating current (decimal value). 7-segment display (A/B): [i1.∗ ∗ ∗] ⇒ [i2.∗ ∗ ∗] ⇒ [i3.∗ ∗ ∗] ⇒ ... Pressing of <SW05> restores normal display.				
	6		Outdoor fan mode	A	[FP]		
				B	Mode 0 to 63: [… 0] to [63]		
	7		Compressor backup	A	[C.b.]		
				B	Displays compressor backup setting status Normal: [… … …] Compressor No. 1 backup: [1 … …] Compressor No. 2 backup: [… 1 …] Compressor No. 3 backup: [… … 1]		
	8		–	A	–		
				B	–		
	9		Control valve output data	Displays control output status of solenoid valve		A	B
				4-way valve: ON / 4-way valve 2: OFF		H. 1	… … …
				4-way valve: OFF / 4-way valve 2: ON		H. 0	… … …
	10			SV2: ON / SV5: OFF / SV6: OFF		2. …	1 0 0
				SV2: OFF / SV5: ON / SV6: ON		2. …	0 1 0
				SV2: OFF / SV5: OFF / SV6: ON		2. …	0 0 1
	11			SV3A: ON / SV3B: OFF / SV3C: OFF / SV3D: OFF		3. 1	0 0 0
				SV3A: OFF / SV3B: ON / SV3C: OFF / SV3D: OFF		3. 0	1 0 0
				SV3A: OFF / SV3B: OFF / SV3C: ON / SV3D: OFF		3. 0	0 1 0
				SV3A: OFF / SV3B: OFF / SV3C: OFF / SV3D: ON		3. 0	0 0 1
	12			SV41: ON / SV42: OFF / SV43: OFF		4. …	1 0 0
				SV41: OFF / SV42: ON / SV43: OFF		4. …	0 1 0
				SV41: OFF / SV42: OFF / SV43: ON		4. …	0 0 1
	13			SV3F: OFF		A. …	… … 0
				SV3F: ON		A. …	… … 1
	14		PMV1/PMV2 opening	Displays opening data in decimal format (total opening)		∗ ∗	∗ ∗. P
	15		PMV4 opening	Displays opening data in decimal format		… ∗	∗ ∗. P
	16		Oil level judgment status				
			Normal	A	[o L.]		
				B	Initial display: [… … …], Oil level judgment result: [#.∗.$] Displayed letters #, ∗ and $ represent judgment results for compressor Nos. 1, 2 and 3, respectively (“0” for normal and “1” or “2” for low level).		
			<SW04> push SW function: Displays low level confirmed judgment result of each compressor.				
			* Pressing of <SW05> restores normal display.	A	[L d.]		
				B	Compressor No. 1 low level being confirmed: [L … …] Compressor No. 2 low level being confirmed: [… L …] Compressor No. 3 low level being confirmed: [… … L]		

(3) Display of Outdoor Cycle Data (Displayed at Each Outdoor Unit)

SW01	SW02	SW03	Display detail				
1	1	2	Pd pressure data	Pd pressure (psi) is displayed in decimal format.		A	B
						P d.	∗∗.∗
	2		Ps pressure data	Ps pressure (psi) is displayed in decimal format.		P S.	∗∗.∗
	3		PL pressure conversion data	Converted PL pressure (psi) is displayed in decimal format.		P L.	∗.∗∗
	4		TD1 sensor data	Temperature sensor reading (°F) is displayed in decimal format. • Letter symbol and data are displayed alternately, for 1 second and display for 3 seconds, respectively. • Data with negative value is displayed as [– ∗] [∗∗∗].	Letter symbol	t d	1 … …
					Data	∗	∗∗.∗
	5		TD2 sensor data		Letter symbol	t d	2 … …
					Data	∗	∗∗.∗
	6		TD3 sensor data		Letter symbol	t d	3 … …
					Data	∗	∗∗.∗
	7		TS sensor data		Letter symbol	t S	… … …
					Data	∗	∗∗.∗
	8		TE1 sensor data		Letter symbol	t E	… … …
					Data	∗	∗∗.∗
	9		TE2 sensor data		Letter symbol	t E	2 … …
					Data	∗	∗∗.∗
	10		TL sensor data		Letter symbol	t L	… … …
					Data	∗	∗∗.∗
	11		TO sensor data		Letter symbol	t o	… … …
					Data	∗	∗∗.∗
	12		TK1 sensor data		Letter symbol	F 1	… … …
					Data	∗	∗∗.∗
	13		TK2 sensor data		Letter symbol	F 2	… … …
					Data	∗	∗∗.∗
	14		TK3 sensor data		Letter symbol	F 3	… … …
					Data	∗	∗∗.∗
	15		TK4 sensor data		Letter symbol	F 4	… … …
					Data	∗	∗∗.∗
	16		TK5 sensor data		Letter symbol	F 5	… … …
					Data	∗	∗∗.∗

(4) Display of Outdoor Cycle Data (Displayed at Header Unit)

* This method is used when displaying follower unit information on the 7-segment display of the header unit.

SW01	SW02	SW03	Display detail		
3	1	1~3	Error data	A	[U.∗], ∗: SW03 setting No. + 1 (Outdoor unit No. U2)
				B	Check code is displayed (latest one only). If there is no check code: [– – –].
	2		Type of compressor installed	A	[U.∗], ∗: SW03 setting No. + 1 (Outdoor unit No. U2)
				B	
	3		Outdoor unit capacity	A	6 ton to 20 ton [... ... 6. 0 t.] to [... 2 0. 0 t.] A B A B
				B	
	4		Compressor operation command	A	[U.∗], ∗: SW03 setting No. + 1 (Outdoor unit No. U2 to U4)
				B	Indicates which compressor is ON. ∗ Any unconnected compressors is represented by "–".

	B
When compressor No. 1 is ON	1 0 0
When compressor No. 2 is ON	0 1 0
When compressor No. 3 is ON	0 0 1

SW01	SW02	SW03	Display detail		
3	5	1~3	Fan operation mode	A	[U.∗], ∗: SW03 setting No. + 1 (Outdoor unit No. U2)
				B	At rest: [F … 0], In mode 63: [F 6 3]
	6		Release signal	A	[U.∗], ∗: SW03 setting No. + 1 (Outdoor unit No. U2)
				B	Normal: [r … …], Upon receiving release signal: [r … 1]
	7		Oil level judgment	A	[U.∗], ∗: SW03 setting No. + 1 (Outdoor unit No. U2)
				B	Normal: [… … …], Low level: [… … L]
	8		Compressor 1 operating current	A	[U.∗], ∗: SW03 setting No. + 1 (Outdoor unit No. U2)
				B	[∗∗.∗], ∗∗.∗ is value of operating current in decimal format.
	9		Compressor 2 operating current	A	[U.∗], ∗: SW03 setting No. + 1 (Outdoor unit No. U2)
				B	[∗∗.∗], ∗∗.∗ is value of operating current in decimal format.
	10		Compressor 3 operating current	A	[U.∗], ∗: SW03 setting No. + 1 (Outdoor unit No. U2)
				B	[∗∗.∗], ∗∗.∗ is value of operating current in decimal format.
	11		Fan operating current	A	[U.∗], ∗: SW03 setting No. + 1 (Outdoor unit No. U2)
				B	[∗∗.∗], ∗∗.∗ is value of operating current in decimal format.

Note: Follower unit is selected by setting SW03.

SW03	7-segment display section A
1	U2

(5) Display of Indoor Unit Information (Displayed on Header Unit Only)

SW01	SW02	SW03	Display detail		
4	1~16	1~4	Indoor BUS communication signal receiving status	B	Upon receiving signal: [… … 1], Other times: [… … …]
5			Indoor check code	B	No check code: [– – –]
6			Indoor capacity	B	0.6 to 4.5
7			Indoor request command (S code, operation mode)	B	[#. … ∗] # represents mode: COOL: [C. … ∗], HEAT: [H. … ∗] FAN: [F. … ∗], OFF: [S. … ∗] ∗ represents S code: [#. … 0] to [#. … F]
8			Indoor PMV opening data	B	Displayed in decimal format
9			Indoor TA sensor data	B	Displayed in decimal format
11		1~4	Indoor TCJ sensor data	B	Displayed in decimal format
12			Indoor TC1 sensor data	B	Displayed in decimal format
13			Indoor TC2 sensor data	B	Displayed in decimal format

Note: Indoor address No. is selected by setting SW02 and SW03 and displayed on 7-segment display, section A.

SW03	SW02	Indoor address	7-segment display section A
1	1~16	SW02 setting number	[01]~[16]
2	1~16	SW02 setting number +16	[17]~[32]
3	1~16	SW02 setting number +32	[33]~[48]
4	1~16	SW02 setting number +48	[49]~[64]

* Although 64 indoor unit addresses (Nos. 01-64) are theoretically available, the number of indoor units that can be connected to the same refrigerant piping system is limited to 48.

(6) Display of Outdoor EEPROM Writing Error Code (Displayed on Header Unit Only)

* The latest error code written in the EEPROM of each outdoor unit is displayed.
(This function is used to check the error code after the resetting of the power supply.)

To display the error code, press SW04 and hold for at least 5 seconds after setting SW01 to 03 as shown in the table below.

SW01	SW02	SW03	Indoor address	7-segment display section A	
1	1	16	Latest error code of header unit (U1)	E. 1.	∗∗∗
	2		Latest error code of follower unit No. 1 (U2)	E. 2.	∗∗∗
	3		Latest error code of follower unit No. 2 (U3)	E. 3.	∗∗∗
	4		Latest error code of follower unit No. 3 (U4)	E. 4.	∗∗∗

• 7-Segment Display

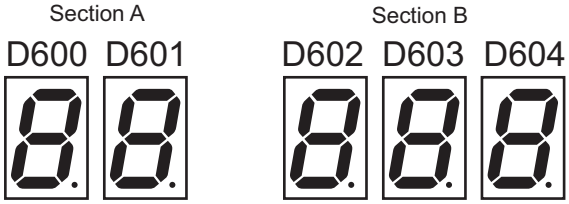

Set SW01/SW02/SW03 to [1/1/16] and press SW04 and hold for at least 5 seconds. The latest error code of the header unit (U1) will be displayed.
If the setting of SW02 is changed, the latest error code of a follow unit (U2-U4) will be displayed.

9-7. Oil level judgment display

The current compressor oil level judgment results can be accessed by setting the switches provided on the interface P.C. board of an outdoor unit.
Perform the checks in accordance with the procedure described below.

1 Operation Procedure

(1) Start the operation.

(2) Set the switches provided on the interface P.C. board of the outdoor unit for which oil level judgment results are required as follows:
SW01/SW02/SW03 = 1/16/1

(3) The oil level judgment result will be displayed on the 7-segment display.
7-segment display: [oL] [#. ∗.$]
The letters #, ∗ and $ are digits that represent judgment results for compressor Nos. 1, 2 and 3, respectively.
(See the table below for the interpretation of the judgment results.)

(4) When checking is completed, revert the SW01/SW02/SW03 setting to [1/1/1].

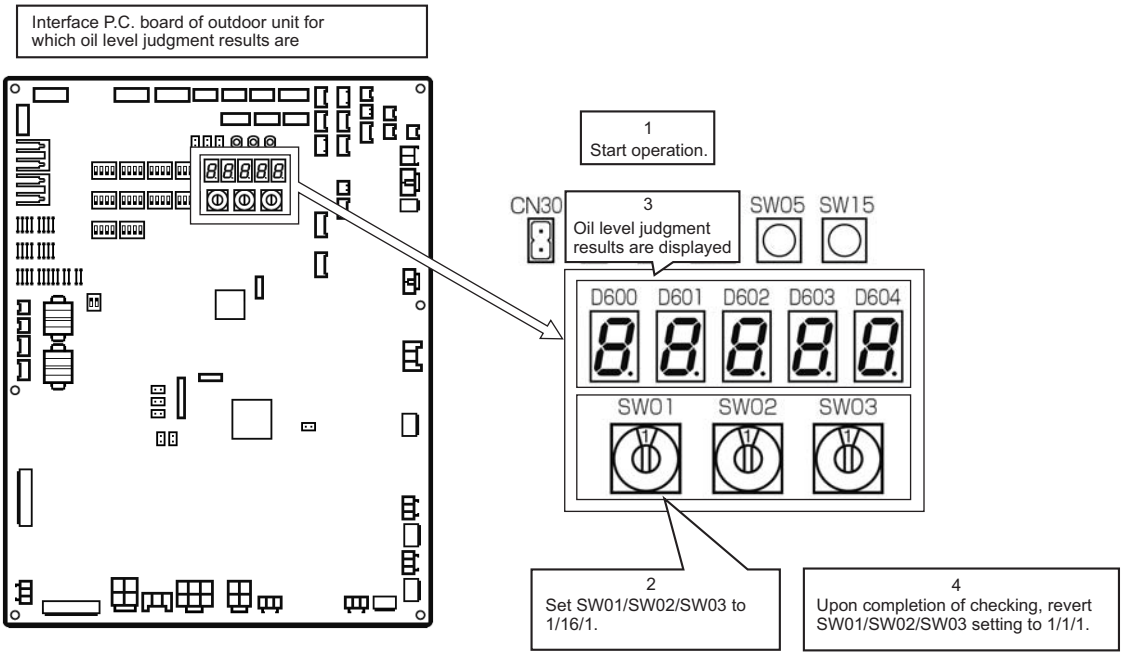

2 Oil Level Judgment Results

Displayed digit	Judgment result	Description
O	Normal	The amount of oil in the compressor is sufficient.
1 2	Low level	The amount of oil in the compressor is insufficient. (Both “1” and “2” stand for insufficiency.) If this result persists, the system will turn itself off in a protective shutdown.

Display example

7-segment display [oL] [0 0 0] Oil level is normal for compressors 1, 2 and 3.
[oL] [2 2 2] Oil level is low for compressors 1, 2 and 3.
[oL] [0 2 0] Oil level is low for compressor 2 and normal for compressors 1 and 3.

Judgment result for compressor 3
Judgment result for compressor 2
Judgment result for compressor 1

9-8. Leakage/clogging of refrigerating cycle circuit

List of Check Codes Generated upon Occurrence of Leakage/Clogging in Outdoor Cycle or Oil Circuit Part (MMY-MAP0724HT9UL)

Clogging

Part	Site of fault (see next page)	Unit generating check code	Detected fault and check code		Symptom
Outdoor PMV1, 2	A	Corresponding unit	Activation of high-pressure protection Activation of low-pressure protection Discharge temp. error (TD1) Discharge temp. error (TD2)	P20 H06 P03 P17	Rise of pressure Fall of pressure Rise of discharge temp. (compressor 1) Rise of discharge temp. (compressor 2)
Check valve in discharge pipe convergent section	B	Corresponding unit	High-pressure protection error High-pressure SW system error	P20 P04-XX	Abnormal rise of pressure
Check valve in discharge pipe	C	Corresponding unit	High-pressure SW system error	P04-XX	Abnormal rise of pressure
Check valve in oil-equalization circuit Capillary Strainer	D	Corresponding unit	Oil level detection circuit error Oil level low detection and protection	H16-XX H07	Oil circuit error or oil level low
SV3A valve	E	Other connected unit	Oil level low detection and protection	H07	Oil level low
SV3B valve	F	Corresponding unit	Oil level low detection and protection	H07	Oil level low
SV3C valve	G	Other connected unit	Oil level low detection and protection	H07	Oil level low
SV3D valve SV3D valve circuit capillary Strainer	H	Corresponding unit	Oil level low detection and protection	H07	Oil level low
SV3E valve	I	Corresponding unit	Oil level detection circuit error Oil level low detection and protection	H16-05 H07	Oil circuit error Oil level low Oil level low
Oil return distributor	J	Corresponding unit	Oil level low detection and protection	H07	Oil level low
SV3C bypass capillary	K	Corresponding unit	Oil level detection circuit error	H16-04	Oil circuit error

Leakage

Part	Site of fault (see next page)	Unit generating check code	Detected fault and check code		Symptom
Outdoor PMV1, 2	A	Corresponding unit	Outdoor liquid backflow error Oil level low detection and protection	P13 H07	Refrigerant entrapment
		Other connected unit	Discharge temp. error (TD1) Discharge temp. error (TD2)	P03 P17	Rise of discharge temp. (compressor 1) Rise of discharge temp. (compressor 2)
Check valve in discharge pipe convergent section	B	Corresponding unit	Oil level low detection and protection Compressor breakdown Compressor error (lockup)	H07 H01-XX H02-XX	Refrigerant entrapment
Check valve in discharge pipe	C	Corresponding unit	Oil level low detection and protection Compressor breakdown Compressor error (lockup)	H07 H01-XX H02-XX	Refrigerant entrapment
Check valve in oil-equalization circuit	D	Corresponding unit	Oil level low detection and protection	H07	Excessive amount of oil (Leaking side) Insufficient amount of oil (Normal side)
SV3A valve	E	Corresponding unit	Oil level low detection and protection	H07	Oil level low
SV3C valve	G	Corresponding unit	Oil level low detection and protection	H07	Oil level low

Note: “XX” represents sub-code

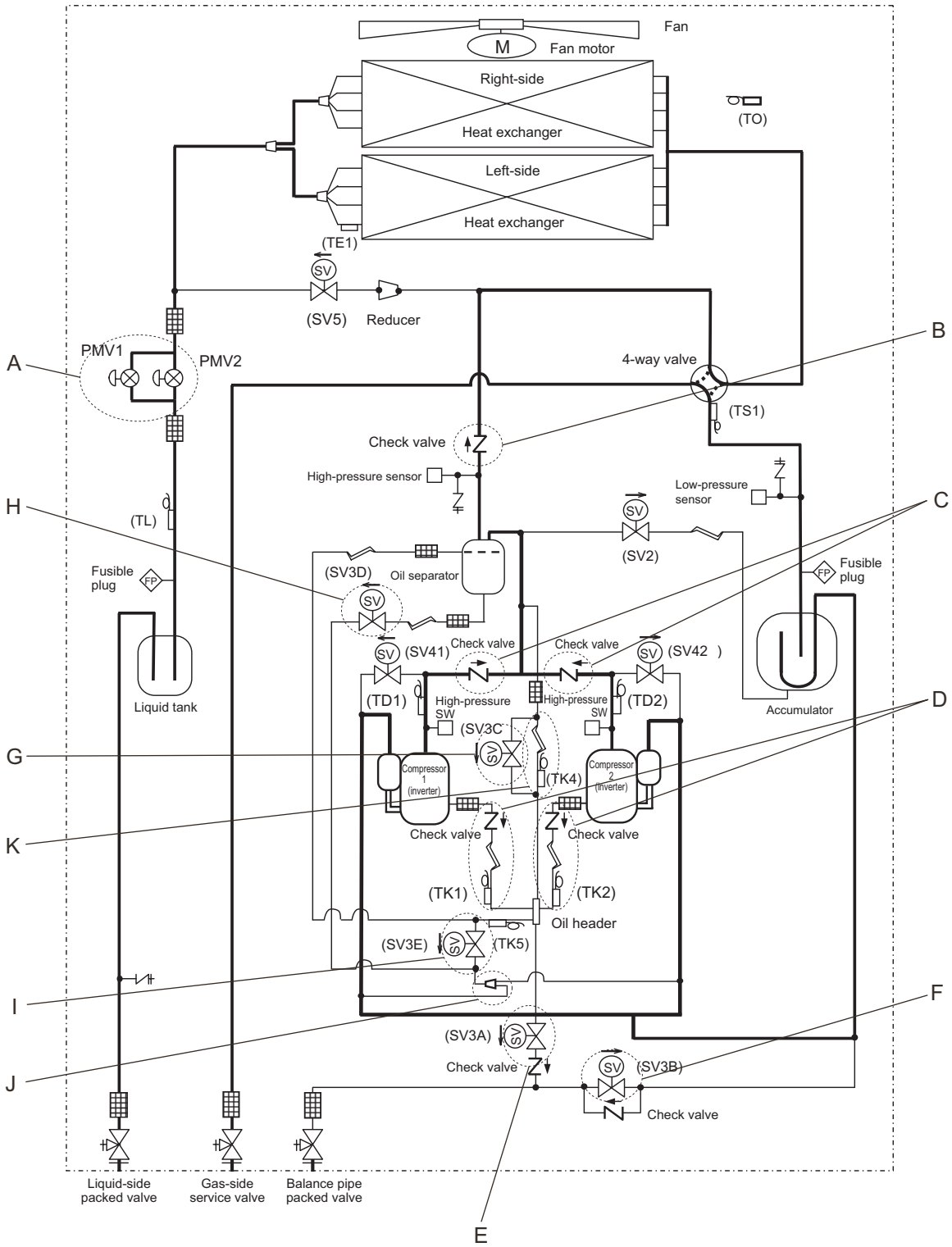
Fan
M
Fan motor
Right-side
Heat exchanger
(TO)
Left-side
Heat exchanger
(TE1)
SV
(SV5)
Reducer
A
PMV1
PMV2
B
4-way valve
(TS1)
Check valve
High-pressure sensor
Low-pressure sensor
H
(TL)
C
SV
(SV2)
Fusible plug
FP
(SV3D)
Oil separator
Fusible plug
FP
SV
SV
(SV41)
Check valve
Check valve
SV
(SV42)
Liquid tank
(TD1)
High-pressure SW
High-pressure SW
(TD2)
Accumulator
D
(SV3C)
G
SV
Compressor 1 (inverter)
(TK4)
Compressor 2 (Inverter)
K
Check valve
Check valve
(TK1)
(TK2)
Oil header
(SV3E)
SV
(TK5)
I
F
(SV3A)
SV
J
Check valve
SV
(SV3B)
Check valve
Liquid-side packed valve
Gas-side service valve
Balance pipe packed valve
E

List of Check Codes Generated upon Occurrence of Leakage/Clogging in Outdoor Cycle or Oil Circuit Part (MMY-MAP0964HT9UL, MAP1144HT9UL)

Clogging

Part	Site of fault (see next page)	Unit generating check code	Detected fault and check code		Symptom
Outdoor PMV1, 2, 4	A	Corresponding unit	Activation of high-pressure protection Activation of low-pressure protection Discharge temp. error (TD1) Discharge temp. error (TD2) Discharge temp. error (TD3)	P20 H06 P03 P17 P18	Rise of pressure Fall of pressure Rise of discharge temp. (compressor 1) Rise of discharge temp. (compressor 2) Rise of discharge temp. (compressor 3)
Check valve in discharge pipe convergent section	B	Corresponding unit	High-pressure protection error High-pressure SW system error	P20 P04-XX	Abnormal rise of pressure
Check valve in discharge pipe	C	Corresponding unit	High-pressure SW system error	P04-XX	Abnormal rise of pressure
Check valve in oil-equalization circuit Capillary Strainer	D	Corresponding unit	Oil level detection circuit error Oil level low detection and protection	H16-XX H07	Oil circuit error or oil level low
SV3A valve	E	Other connected unit	Oil level low detection and protection	H07	Oil level low
SV3B valve	F	Corresponding unit	Oil level low detection and protection	H07	Oil level low
SV3C valve	G	Other connected unit	Oil level low detection and protection	H07	Oil level low
SV3D valve SV3D valve circuit capillary Strainer	H	Corresponding unit	Oil level low detection and protection	H07	Oil level low
SV3E valve	I	Corresponding unit	Oil level detection circuit error Oil level low detection and protection	H16-05 H07	Oil circuit error Oil level low Oil level low
SV3F valve	J	Corresponding unit	Oil level low detection and protection	H07	Oil level low
Oil return distributor	K	Corresponding unit	Oil level low detection and protection	H07	Oil level low
SV3C bypass capillary	L	Corresponding unit	Oil level detection circuit error	H16-04	Oil circuit error

Leakage

Part	Site of fault (see next page)	Unit generating check code	Detected fault and check code		Symptom
Outdoor PMV1, 2	A	Corresponding unit	Outdoor liquid backflow error Oil level low detection and protection	P13 H07	Refrigerant entrapment
		Other connected unit	Discharge temp. error (TD1) Discharge temp. error (TD2) Discharge temp. error (TD3)	P03 P17 P18	Rise of discharge temp. (compressor 1) Rise of discharge temp. (compressor 2) Rise of discharge temp. (compressor 3)
Check valve in discharge pipe convergent section	B	Corresponding unit	Oil level low detection and protection Compressor breakdown Compressor error (lockup)	H07 H01-XX H02-XX	Refrigerant entrapment
Check valve in discharge pipe	C	Corresponding unit	Oil level low detection and protection Compressor breakdown Compressor error (lockup)	H07 H01-XX H02-XX	Refrigerant entrapment
Check valve in oil-equalization circuit	D	Corresponding unit	Oil level low detection and protection	H07	Excessive amount of oil (Leaking side) Insufficient amount of oil (Normal side)
SV3A valve	E	Corresponding unit	Oil level low detection and protection	H07	Oil level low
SV3C valve	G	Corresponding unit	Oil level low detection and protection	H07	Oil level low

Note: “XX” represents sub-code

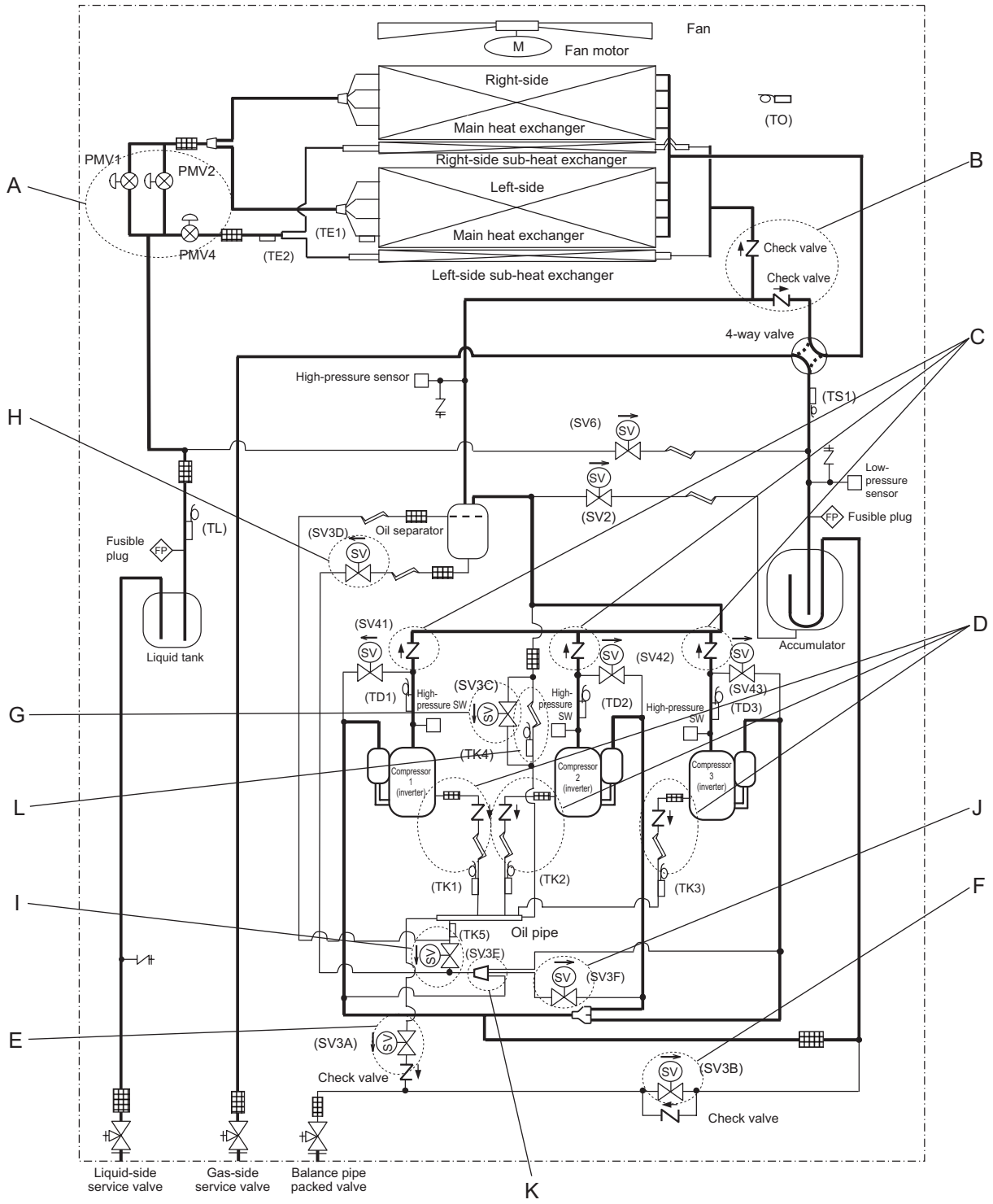
Fan
M
Fan motor
Right-side
Main heat exchanger
(TO)
Right-side sub-heat exchanger
PMV1
PMV2
A
B
Left-side
(TE1)
Main heat exchanger
PMV4
(TE2)
Check valve
Check valve
Left-side sub-heat exchanger
4-way valve
C
High-pressure sensor
(TS1)
H
(SV6)
Low-pressure sensor
(SV2)
Fusible plug
(TL)
(SV3D)
Oil separator
Fusible plug
Liquid tank
Accumulator
D
(SV41)
(SV42)
(SV43)
(SV3C)
(TD1)
High-pressure SW
(TD2)
(TD3)
G
(TK4)
Compressor 1 (inverter)
Compressor 2 (inverter)
Compressor 3 (inverter)
L
J
(TK1)
(TK2)
(TK3)
F
I
(TK5)
Oil pipe
(SV3E)
(SV3F)
E
(SV3A)
Check valve
(SV3B)
Check valve
Liquid-side service valve
Gas-side service valve
Balance pipe packed valve
K

9-9. Sensor characteristics

Outdoor Unit

▼ Temperature sensor characteristics

Outdoor TS1, TE1, TE2, TL and TO sensors

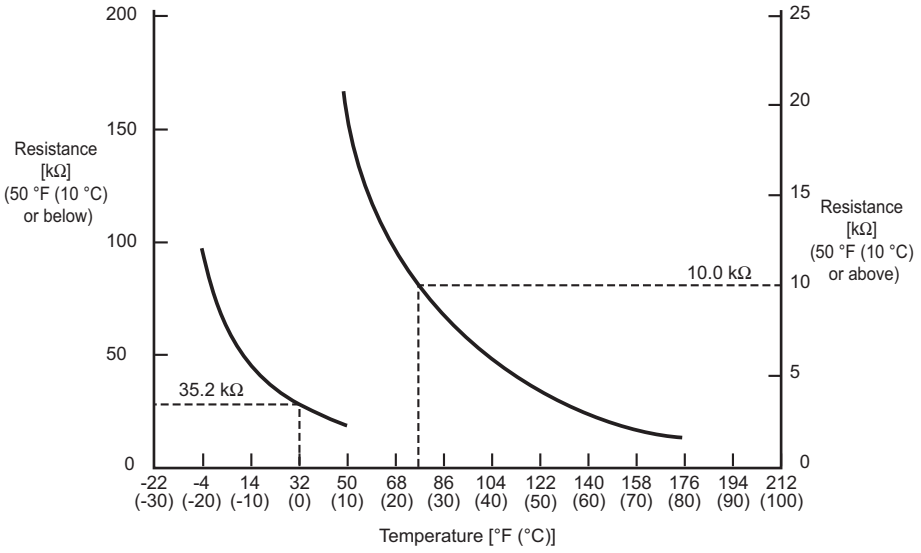

Temperature [°F (°C)]	Resistance [kΩ]
-4 (-20)	114.8
5 (-15)	83.9
14 (-10)	62.1
23 (-5)	46.5
32 (0)	35.2
41 (5)	26.9
50 (10)	20.7
59 (15)	16.1
68 (20)	12.7
77 (25)	10.0
86 (30)	8.0
95 (35)	6.4
104 (40)	5.2
113 (45)	4.2
122 (50)	3.5
131 (55)	2.9
140 (60)	2.4
149 (65)	2.0
158 (70)	1.7
167 (75)	1.4
176 (80)	1.2

Outdoor TD1,TD2,TD3,TK1,TK2,TK3,TK4 and TK5 sensors

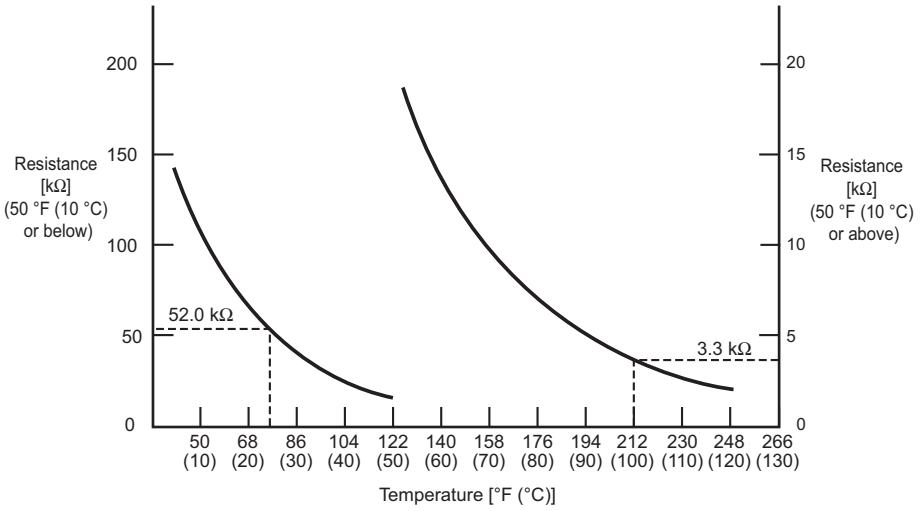

Temperature [°F (°C)]	Resistance [kΩ]
32 (0)	181.5
41 (5)	138.5
50 (10)	107.2
59 (15)	83.6
68 (20)	65.7
77 (25)	52.0
86 (30)	41.5
95 (35)	33.4
104 (40)	27.1
113 (45)	22.1
122 (50)	18.1
131 (55)	14.9
140 (60)	12.4
149 (65)	10.4
158 (70)	8.7
167 (75)	7.3
176 (80)	6.2
185 (85)	5.3
194 (90)	4.5
203 (95)	3.9
212 (100)	3.3
221 (105)	2.9
230 (110)	2.5
239 (115)	2.2
248 (120)	1.9

Outdoor Unit

▼ Pressure sensor characteristics

- Input / output wiring summary

Pin No.	High pressure side (Pd)		Low pressure side (Ps)	
	Input / output name	Lead wire color	Input / output name	Lead wire color
1	OUTPUT	White	—	—
2	—	—	OUTPUT	White
3	GND	Black	GND	Black
4	+5V	Red	+5V	Red

- Output voltage vs. pressure

High pressure side (Pd)	Low pressure side (Ps)
0.5~4.3 V 0~540.9 psi (0~3.73 MPa)	0.5~3.5 V 0~142.1 psi (0~0.98 MPa)

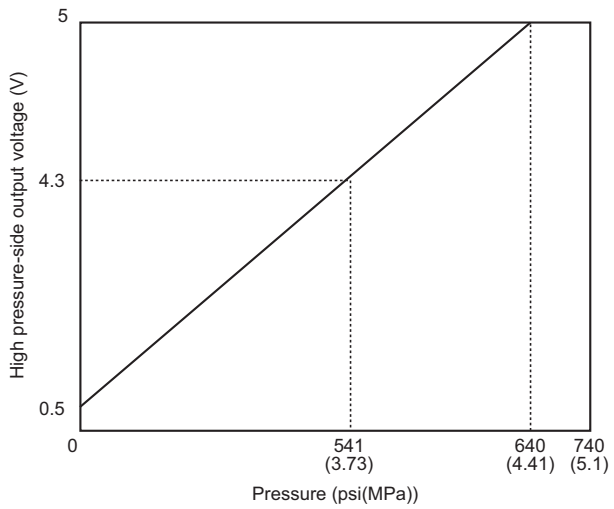

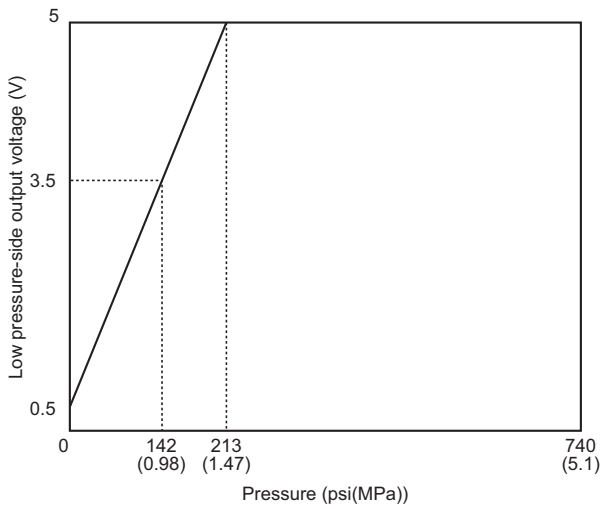

Indoor Unit

▼ Temperature sensor characteristics

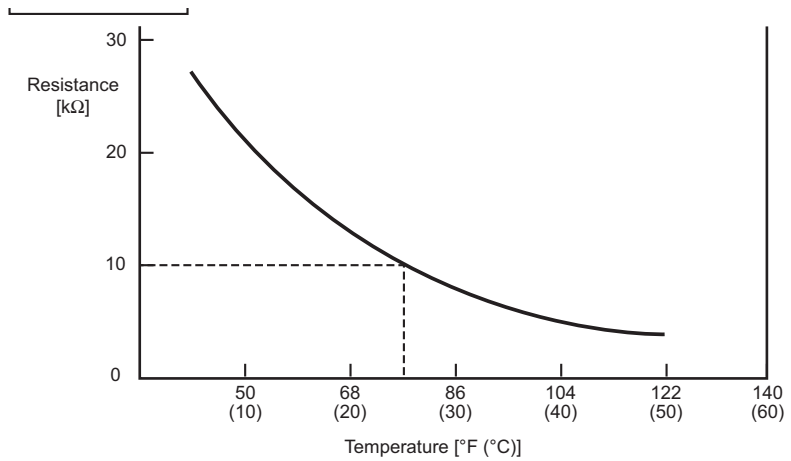

Temperature [°F (°C)]	Resistance [kΩ]
32 (0)	33.9
41 (5)	26.1
50 (10)	20.3
59 (15)	15.9
68 (20)	12.6
77 (25)	10.0
86 (30)	8.0
95 (35)	6.4
104 (40)	5.2
113 (45)	4.2
122 (50)	3.5
131 (55)	2.8
140 (60)	2.4

Indoor TC1 sensor

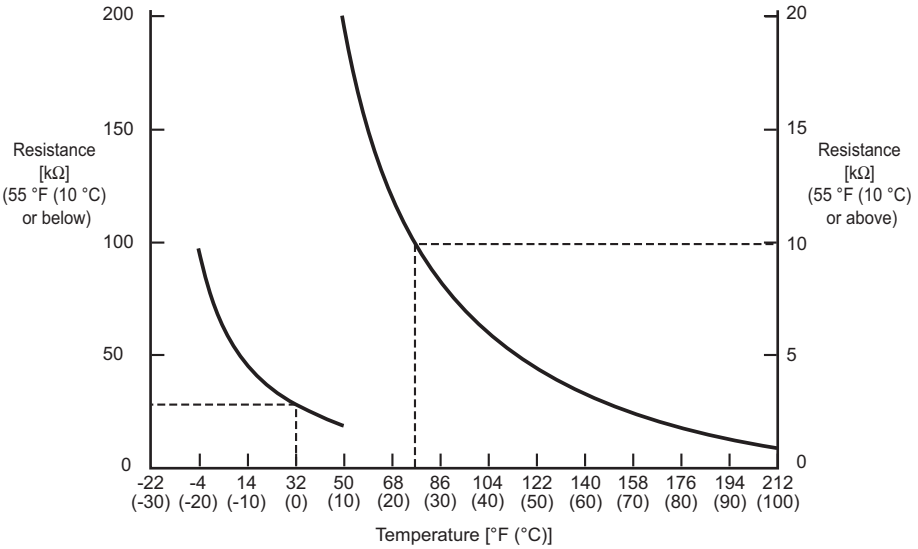

Temperature [°F (°C)]	Resistance [kΩ]
-4 (-20)	99.9
5 (-15)	74.1
14 (-10)	55.6
23 (-5)	42.2
32 (0)	32.8
41 (5)	25.4
50 (10)	19.8
59 (15)	15.6
68 (20)	12.4
77 (25)	10.0
86 (30)	8.1
95 (35)	6.5
104 (40)	5.3
113 (45)	4.4
122 (50)	3.6
131 (55)	3.0
140 (60)	2.5
149 (65)	2.1
158 (70)	1.8
167 (75)	1.5
176 (80)	1.3
185 (85)	1.1
194 (90)	1.0
203 (95)	0.8
212 (100)	0.7

Indoor TC2 and TCJ sensors

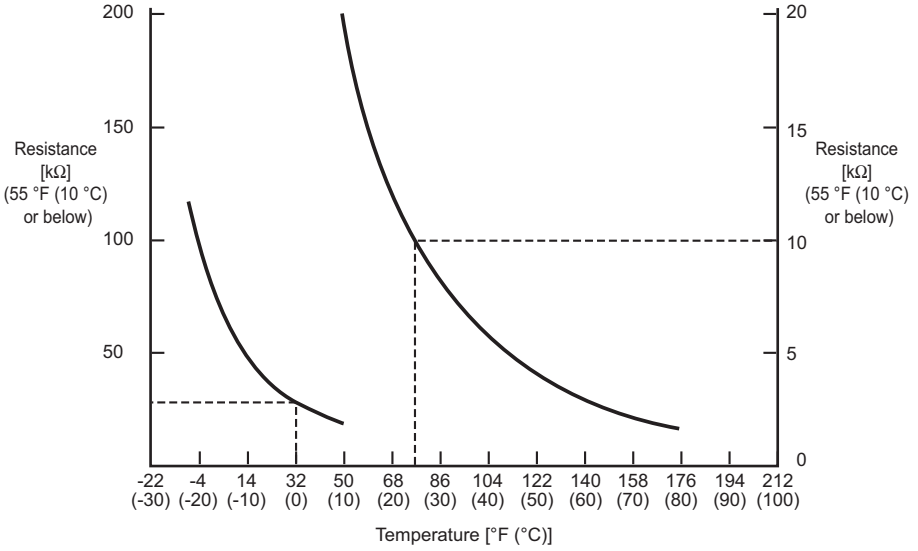

Temperature [°F (°C)]	Resistance [kΩ]
-4 (-20)	115.2
5 (-15)	84.2
14 (-10)	62.3
23 (-5)	46.6
32 (0)	35.2
41 (5)	26.9
50 (10)	20.7
59 (15)	16.1
68 (20)	12.6
77 (25)	10.0
86 (30)	8.0
95 (35)	6.4
104 (40)	5.2
113 (45)	4.2
122 (50)	3.5
131 (55)	2.8
140 (60)	2.4
149 (65)	2.0
158 (70)	1.6
167 (75)	1.4
176 (80)	1.2

9-10. Pressure sensor output check

Outdoor Unit

▼ Pd sensor characteristics

0 to 639 psi (4.41 MPa) (0.5 to 5 V output for 0 to 639 psi (4.41 MPa))

Voltage readings across pins 2 and 3 of CN501 on indoor unit main P.C. board (with negative-side probe of multimeter placed on pin 3)

VOLT	Pd		VOLT	Pd		VOLT	Pd		VOLT	Pd		VOLT	Pd	
(V)	(MPa)	(psi)	(V)	(MPa)	(psi)	(V)	(MPa)	(psi)	(V)	(MPa)	(psi)	(V)	(MPa)	(psi)
0.00	0.00	0	1.00	0.49	71	1.99	1.46	212	2.99	2.44	354	3.98	3.42	496
0.02	0.00	0	1.02	0.51	74	2.01	1.48	215	3.01	2.46	357	4.00	3.44	499
0.04	0.00	0	1.04	0.53	77	2.03	1.50	218	3.03	2.48	360	4.02	3.45	500
0.06	0.00	0	1.06	0.54	78	2.05	1.52	220	3.05	2.50	363	4.04	3.48	505
0.08	0.00	0	1.07	0.56	81	2.07	1.54	223	3.07	2.52	365	4.06	3.49	506
0.10	0.00	0	1.09	0.58	84	2.09	1.56	226	3.09	2.54	368	4.08	3.51	509
0.12	0.00	0	1.11	0.60	87	2.11	1.58	229	3.11	2.56	371	4.10	3.53	512
0.14	0.00	0	1.13	0.62	90	2.13	1.60	232	3.13	2.57	373	4.12	3.55	515
0.16	0.00	0	1.15	0.64	93	2.15	1.62	235	3.15	2.59	376	4.14	3.57	518
0.18	0.00	0	1.17	0.66	96	2.17	1.64	238	3.16	2.61	378	4.16	3.59	521
0.20	0.00	0	1.19	0.68	99	2.19	1.66	241	3.18	2.63	381	4.18	3.61	523
0.22	0.00	0	1.21	0.70	102	2.21	1.67	242	3.20	2.65	384	4.20	3.63	526
0.23	0.00	0	1.23	0.72	104	2.23	1.69	245	3.22	2.67	387	4.22	3.65	529
0.25	0.00	0	1.25	0.74	107	2.25	1.71	248	3.24	2.69	390	4.24	3.67	532
0.27	0.00	0	1.27	0.76	110	2.27	1.73	251	3.26	2.71	393	4.26	3.69	535
0.29	0.00	0	1.29	0.77	112	2.29	1.75	254	3.28	2.73	396	4.28	3.70	537
0.31	0.00	0	1.31	0.79	115	2.31	1.77	257	3.30	2.75	399	4.30	3.72	539
0.33	0.00	0	1.33	0.81	117	2.32	1.79	260	3.32	2.77	402	4.32	3.74	542
0.35	0.00	0	1.35	0.83	120	2.34	1.81	262	3.34	2.79	405	4.34	3.76	545
0.37	0.00	0	1.37	0.85	123	2.36	1.83	265	3.36	2.80	406	4.36	3.78	548
0.39	0.00	0	1.39	0.87	126	2.38	1.85	268	3.38	2.82	409	4.38	3.80	551
0.41	0.00	0	1.41	0.89	129	2.40	1.87	271	3.40	2.84	412	4.40	3.82	554
0.43	0.00	0	1.43	0.91	132	2.42	1.89	274	3.42	2.86	415	4.41	3.84	557
0.45	0.00	0	1.45	0.93	135	2.44	1.90	276	3.44	2.88	418	4.43	3.86	560
0.47	0.00	0	1.47	0.95	138	2.46	1.92	278	3.46	2.90	421	4.45	3.88	563
0.49	0.00	0	1.48	0.97	141	2.48	1.94	281	3.48	2.92	423	4.47	3.90	566
0.51	0.01	1	1.50	0.99	144	2.50	1.96	284	3.50	2.94	426	4.49	3.92	568
0.53	0.03	4	1.52	1.00	145	2.52	1.98	287	3.52	2.96	429	4.51	3.93	570
0.55	0.05	7	1.54	1.02	148	2.54	2.00	290	3.54	2.98	432	4.53	3.95	573
0.57	0.07	10	1.56	1.04	151	2.56	2.02	293	3.56	3.00	435	4.55	3.97	576
0.59	0.08	12	1.58	1.06	154	2.58	2.04	296	3.57	3.02	438	4.57	3.99	579
0.61	0.10	15	1.60	1.08	157	2.60	2.06	299	3.59	3.03	439	4.59	4.01	581
0.63	0.12	17	1.62	1.10	160	2.62	2.08	302	3.61	3.05	442	4.61	4.03	584
0.65	0.14	20	1.64	1.12	162	2.64	2.10	305	3.63	3.07	445	4.63	4.05	587
0.66	0.16	23	1.66	1.14	165	2.66	2.12	307	3.65	3.09	448	4.65	4.07	590
0.68	0.18	26	1.68	1.16	168	2.68	2.13	309	3.67	3.11	451	4.67	4.09	593
0.70	0.20	29	1.70	1.18	171	2.70	2.15	312	3.69	3.13	454	4.69	4.11	596
0.72	0.22	32	1.72	1.20	174	2.72	2.17	315	3.71	3.15	457	4.71	4.13	599
0.74	0.24	35	1.74	1.21	175	2.73	2.19	318	3.73	3.17	460	4.73	4.15	602
0.76	0.26	38	1.76	1.23	178	2.75	2.21	320	3.75	3.19	463	4.75	4.16	603
0.78	0.28	41	1.78	1.25	181	2.77	2.23	323	3.77	3.21	465	4.77	4.18	606
0.80	0.30	44	1.80	1.27	184	2.79	2.25	326	3.79	3.23	468	4.79	4.20	609
0.82	0.31	45	1.82	1.29	187	2.81	2.27	329	3.81	3.25	471	4.81	4.22	612
0.84	0.33	48	1.84	1.31	190	2.83	2.29	332	3.83	3.26	473	4.82	4.24	615
0.86	0.35	51	1.86	1.33	193	2.85	2.31	335	3.85	3.28	476	4.84	4.26	618
0.88	0.37	54	1.88	1.35	196	2.87	2.33	338	3.89	3.30	479	4.86	4.28	621
0.90	0.39	57	1.90	1.37	199	2.89	2.35	341	3.89	3.32	481	4.88	4.30	624
0.92	0.41	59	1.91	1.39	202	2.91	2.36	342	3.91	3.34	484	4.90	4.32	626
0.94	0.43	62	1.93	1.41	204	2.93	2.38	345	3.93	3.36	487	4.92	4.34	629
0.96	0.45	65	1.95	1.43	207	2.95	2.40	348	3.95	3.38	490	4.94	4.36	632
0.98	0.47	68	1.97	1.44	209	2.97	2.42	351	3.97	3.40	493	4.96	4.38	635
												4.98	4.39	637

Outdoor Unit

▼ Ps sensor characteristics

0 to 215 psi (1.47 MPa) (0.5 to 5 V output for 0 to 215 psi (1.47 MPa))

Voltage readings across pins 2 and 3 of CN500 on indoor unit main P.C. board (with negative-side probe of multimeter placed on pin 3)

VOLT	Ps		VOLT	Ps		VOLT	Ps		VOLT	Ps		VOLT	Ps	
(V)	(MPa)	(psi)	(V)	(MPa)	(psi)	(V)	(MPa)	(psi)	(V)	(MPa)	(psi)	(V)	(MPa)	(psi)
0.00	0.00	0	1.00	0.16	23	1.99	0.49	71	2.99	0.81	117	3.98	1.14	165
0.02	0.00	0	1.02	0.17	25	2.01	0.49	71	3.01	0.82	119	4.00	1.15	167
0.04	0.00	0	1.04	0.18	26	2.03	0.50	73	3.03	0.83	120	4.02	1.15	167
0.06	0.00	0	1.06	0.18	26	2.05	0.51	74	3.05	0.83	120	4.04	1.16	168
0.08	0.00	0	1.07	0.19	28	2.07	0.51	74	3.07	0.84	122	4.06	1.17	170
0.10	0.00	0	1.09	0.19	28	2.09	0.52	75	3.09	0.85	123	4.08	1.17	170
0.12	0.00	0	1.11	0.20	29	2.11	0.53	77	3.11	0.85	123	4.10	1.18	171
0.14	0.00	0	1.13	0.21	30	2.13	0.53	77	3.13	0.86	125	4.12	1.18	171
0.16	0.00	0	1.15	0.21	30	2.15	0.54	78	3.15	0.86	125	4.14	1.19	173
0.18	0.00	0	1.17	0.22	32	2.17	0.55	80	3.16	0.87	126	4.16	1.20	174
0.20	0.00	0	1.19	0.23	33	2.19	0.55	80	3.18	0.88	128	4.18	1.20	174
0.22	0.00	0	1.21	0.23	33	2.21	0.56	81	3.20	0.88	128	4.20	1.21	175
0.23	0.00	0	1.23	0.24	35	2.23	0.56	81	3.22	0.89	129	4.22	1.22	177
0.25	0.00	0	1.25	0.25	36	2.25	0.57	83	3.24	0.90	131	4.24	1.22	177
0.27	0.00	0	1.27	0.25	36	2.27	0.58	84	3.26	0.90	131	4.26	1.23	178
0.29	0.00	0	1.29	0.26	38	2.29	0.58	84	3.28	0.91	132	4.28	1.24	180
0.31	0.00	0	1.31	0.26	38	2.31	0.59	86	3.30	0.92	133	4.30	1.24	180
0.33	0.00	0	1.33	0.27	39	2.32	0.60	87	3.32	0.92	133	4.32	1.25	181
0.35	0.00	0	1.35	0.28	41	2.34	0.60	87	3.34	0.93	135	4.34	1.25	181
0.37	0.00	0	1.37	0.28	41	2.36	0.61	88	3.36	0.94	136	4.36	1.26	183
0.39	0.00	0	1.39	0.29	42	2.38	0.62	90	3.38	0.94	136	4.38	1.27	184
0.41	0.00	0	1.41	0.30	44	2.40	0.62	90	3.40	0.95	138	4.40	1.27	184
0.43	0.00	0	1.43	0.30	44	2.42	0.63	91	3.42	0.95	138	4.41	1.28	186
0.45	0.00	0	1.45	0.31	45	2.44	0.64	93	3.44	0.96	139	4.43	1.29	187
0.47	0.00	0	1.47	0.32	46	2.46	0.64	93	3.46	0.97	141	4.45	1.29	187
0.49	0.00	0	1.48	0.32	46	2.48	0.65	94	3.48	0.97	141	4.47	1.30	189
0.51	0.00	0	1.50	0.33	48	2.50	0.65	94	3.50	0.98	142	4.49	1.31	190
0.53	0.01	1	1.52	0.34	49	2.52	0.66	96	3.52	0.99	144	4.51	1.31	190
0.55	0.02	3	1.54	0.34	49	2.54	0.67	97	3.54	0.99	144	4.53	1.32	191
0.57	0.02	3	1.56	0.35	51	2.56	0.67	97	3.56	1.00	145	4.55	1.32	191
0.59	0.03	4	1.58	0.35	51	2.58	0.68	99	3.57	1.01	146	4.57	1.33	193
0.61	0.03	4	1.60	0.36	52	2.60	0.69	100	3.59	1.01	146	4.59	1.34	194
0.63	0.04	6	1.62	0.37	54	2.62	0.69	100	3.61	1.02	148	4.61	1.34	194
0.65	0.05	7	1.64	0.37	54	2.64	0.70	102	3.63	1.02	148	4.63	1.35	196
0.66	0.05	7	1.66	0.38	55	2.66	0.71	103	3.65	1.03	149	4.65	1.36	197
0.68	0.06	9	1.68	0.39	57	2.68	0.71	103	3.67	1.04	151	4.67	1.36	197
0.70	0.07	10	1.70	0.39	57	2.70	0.72	104	3.69	1.04	151	4.69	1.37	199
0.72	0.07	10	1.72	0.40	58	2.72	0.72	104	3.71	1.05	152	4.71	1.38	200
0.74	0.08	12	1.74	0.41	59	2.73	0.73	106	3.73	1.06	154	4.73	1.38	200
0.76	0.09	13	1.76	0.41	59	2.75	0.74	107	3.75	1.06	154	4.75	1.39	202
0.78	0.09	13	1.78	0.42	61	2.77	0.74	107	3.77	1.07	155	4.77	1.39	202
0.80	0.10	15	1.80	0.42	61	2.79	0.75	109	3.79	1.08	157	4.79	1.40	203
0.82	0.11	16	1.82	0.43	62	2.81	0.76	110	3.81	1.08	157	4.81	1.41	204
0.84	0.11	16	1.84	0.44	64	2.83	0.76	110	3.83	1.09	158	4.82	1.41	204
0.86	0.12	17	1.86	0.44	64	2.85	0.77	112	3.85	1.09	158	4.84	1.42	206
0.88	1.12	162	1.88	0.45	65	2.87	0.78	113	3.89	1.10	160	4.86	1.43	207
0.90	0.13	19	1.90	0.46	67	2.89	0.78	113	3.89	1.11	161	4.88	1.43	207
0.92	0.14	20	1.91	0.46	67	2.91	0.79	115	3.91	1.11	161	4.90	1.44	209
0.94	0.14	20	1.93	0.47	68	2.93	0.79	115	3.93	1.12	162	4.92	1.45	210
0.96	0.15	22	1.95	0.48	70	2.95	0.80	116	3.95	1.13	164	4.94	1.45	210
0.98	0.16	23	1.97	0.48	70	2.97	0.81	117	3.97	1.13	164	4.96	1.46	212
												4.98	1.47	213
												5.00	1.48	215

10 Backup Operation (Emergency Operation)

This product offers backup modes of operation to tide over certain emergency situations. If a fault occurs in one of the compressors, it is possible to operate the system on an emergency basis by operating only the remaining compressor(s), (compressor backup operation).
If one of the outdoor units fails in a combined outdoor unit system, the system can be operated on an emergency basis by keeping only the remaining outdoor unit(s), (outdoor unit backup operation).
Perform backup operation setting in accordance with the procedure described below.

10-1. Note for backup operation

The method of backup operation differs according to the contents of fault as shown in the table below.

Contents of fault	Method of backup operation	Setting procedure
One of the compressors in the same unit fails (see Note 1)	Compressor backup (see Note 2)	Go to 10-2.
All the compressors in the same unit fail	Outdoor unit backup or cooling-season outdoor unit backup (see Notes 1, 3, 4)	Go to 10-3. or 10-4.
A fault occurs in a compressor motor coil (e.g. a layer short-circuit)		
A fault occurs in a refrigerating cycle part, fan or related part, or electrical part		
A fault occurs in a temperature sensor or pressure sensor		

Note 1: If the compressor has failed due to a fault in its motor coil (e.g. a layer short-circuit), do not preform compressor backup operation because of severe oil degradation. It could damage other outdoor units.

Note 2: Keep the number of backed-up outdoor units under compressor backup operation to one in the system (single refrigerant line). For a three-compressor model, the backing up of two faulty compressors is prohibited.

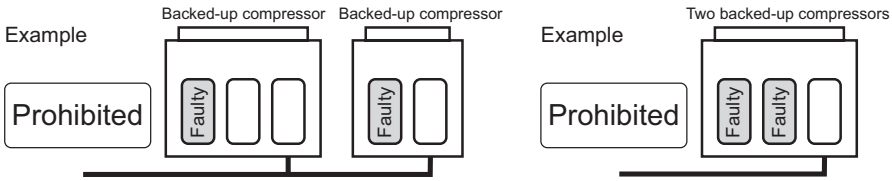

Note 3: It is prohibited to combine compressor backup operation and outdoor unit backup operation.

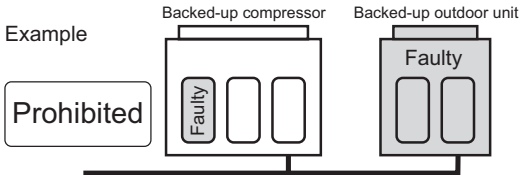

Note 4: With a two-outdoor unit system containing an MMY-MAP0964HT9UL and a MMY-MAP0724HT9UL, do not preform outdoor unit backup operation to back up the MMY-MAP0964HT9UL.
It could lead to compressor failure due to the abnormal operation.

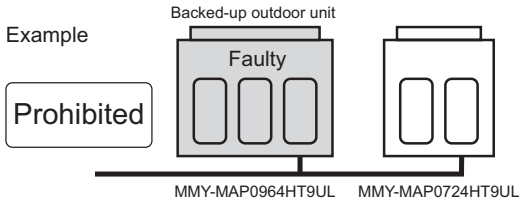

10-2. Compressor backup operation setting

<Outline>

If a fault occurs to one of the compressors installed in outdoor unit, follow the procedure described below to back up the faulty compressor by using the remaining, normal compressor(s).

<Work Procedure>

(1) Turn off the power supply to all the outdoor units connected to the system.

(2) Set the DIP switches of SW06, provided on the interface P.C. board of the outdoor unit with the faulty compressor, as shown in the table below.

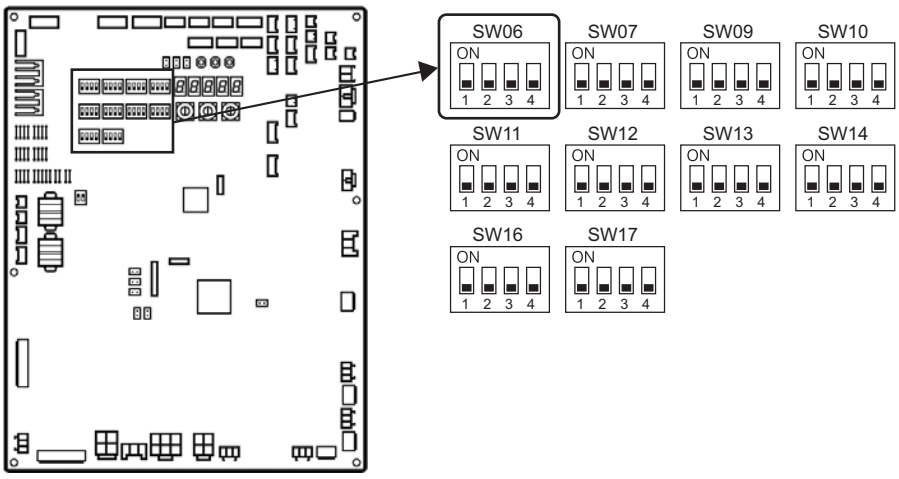

Three-compressor model	SW06			
	Bit 1	Bit 2	Bit 3	Bit 4
Factory default setting	OFF	OFF	OFF	OFF
When compressor No. 1 (front left) is faulty	ON	OFF	OFF	OFF
When compressor No. 2 (front center) is faulty	OFF	ON	OFF	OFF
When compressor No. 3 (front right) is faulty	OFF	OFF	ON	OFF

Two-compressor model	SW06			
	Bit 1	Bit 2	Bit 3	Bit 4
Factory default setting	OFF	OFF	OFF	OFF
When compressor No.1 (front left) is faulty	ON	OFF	OFF	OFF
When compressor No.2 (front right) is faulty	OFF	ON	OFF	OFF

(3) Turn on the power supply to all the units connected to the system.

This is the end of compressor backup operation setting.

10-3. Outdoor unit backup operation setting

<Outline>

This product allows outdoor unit backup operation setting to be performed either at the header unit or a follower unit. If any of the fault modes specified below occurs to one of the outdoor units in a multi-outdoor unit system, proceed with outdoor unit backup operation.

- A compressor failure (e.g. a layer short-circuit or a compressor failure in which no compressor is available to back up the faulty compressor)
- A failure of a pressure sensor (Pd or Ps) or a temperature sensor (TD1, TD2, TD3, TS1, TE1, TE2, TK1, TK2, TK3, TK4, TK5, or TL)

Note: Keep the number of backed-up outdoor units to one in the system (single refrigerant line).

10-3-1. Follower outdoor unit backup operation setting (failure of follower outdoor unit)

<Work procedure>

(1) Turn off the power supply to all the indoor and outdoor units connected to the system.

[Setup of failed follower outdoor unit]

(2) Fully close the gas pipe service valve of the failed outdoor unit.

(3) Leave the service valves of the liquid and balance pipe fully open (to prevent refrigerant stagnation in the unit). However, if there is a leakage from an outdoor PMV (unable to close), fully close the liquid pipe service valve.

(4) <In case of fault in compressor, electrical part, I/F P.C. board, or IPDU P.C. board>
From this point on, keep the power supply to the failed unit off.
<In case of fault in refrigerating circuit or related part (pressure sensor, temperature sensor, refrigerating cycle part, or fan system part)>
Disconnect the connector [CN03] for outdoor-outdoor communication (BUS2) provided on the interface P.C. board.

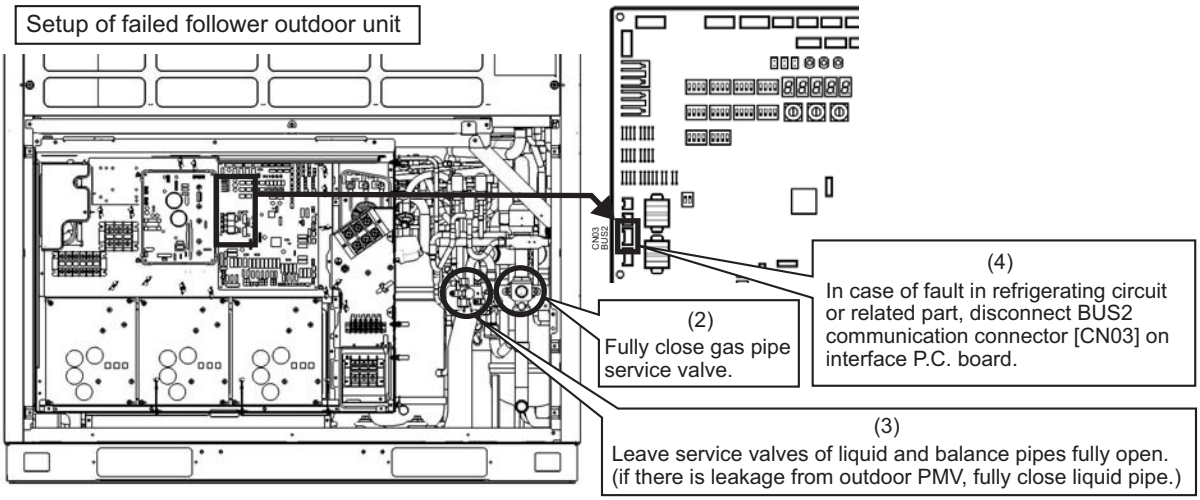

[Setup of header unit]

(5) Turn on Bit 2 of SW09 on the interface P.C. board of the header unit.
(Setting to prevent connected indoor units capacity over error. (E16))

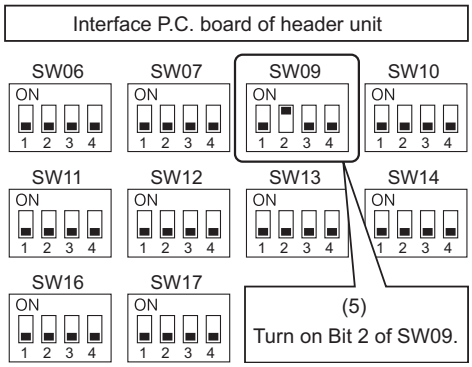

(6) Turn on the power supply to all the units connected to the system other than the failed follower unit.
Determine what to do with the power supply to the failed follower unit in the following manner.
<In case of fault in compressor, electrical part, I/F P.C. board, or IPDU P.C. board>
Leave the power supply off.
<In case of fault in refrigerating circuit or related part (pressure sensor, temperature sensor, refrigerating cycle part, or fan system part)>
Turn on the power supply to protect the compressor (by turning on the case heater).
(When the power supply to the unit is turned on, [E19] (error in the number of outdoor header units) will be displayed on the 7-segment display. However, this will not cause any problems.)

(7) Perform settings needed to gain permission for backup operation from the header unit (error clearance).
1) Set SW01/02/03 on the interface P.C. board to 1/1/1 and confirm that [U1] [E26] (dropping out of an outdoor unit) is displayed on the 7-segment display.
2) Set SW01/02/03 on the interface P.C. board to 2/16/1. Upon confirming that [Er] [… … …] is displayed on the 7-segment display, press SW04 and hold for 5 seconds or more.
3) [Er] [… CL] (error clearance completed) will be displayed on the 7-segment display.
4) Set SW01/02/03 back to 1/1/1. (The display should change to [U1] [– – –].)

(7)
Set SW01/02/03 to 1/1/1
[U1] [E26] will be displayed.
↓
Set SW01/02/03 to [2/16/1].
[Er] [… … …] will be displayed.
↓
Press SW04 and hold for 5 seconds or more
[Er] [… CL] will be displayed.
↓
Set SW01/02/03 back to 1/1/1.
[U1] [– – –] will be displayed.

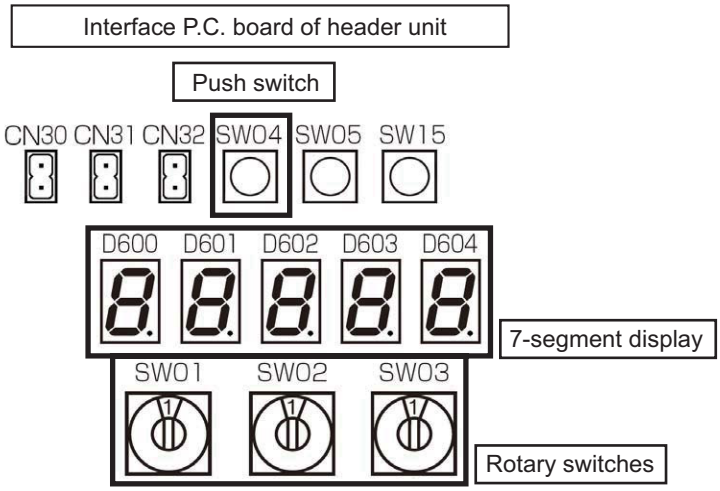

This is the end of follower outdoor unit backup operation setting. Check the operation.

10-3-2. Header outdoor unit backup operation setting (failure of header outdoor unit)

<Work procedure>

(1) Turn off the power supply to all the units connected to the system at the source.

[Setup of failed header outdoor unit]

(2) Fully close the gas pipe service valve of the failed outdoor unit.

(3) Leave the service valves of the liquid and balance pipes fully open (to prevent refrigerant stagnation in the failed outdoor unit).
However, if there is a leakage from an outdoor PMV (unable to close), fully close the liquid pipe service valve.

(4) <In case of fault in compressor, electrical part, I/F P.C. board, or IPDU P.C. board>
From this point on, keep the power supply to the failed unit off.
<In case of fault in refrigerating circuit or related part (pressure sensor, temperature sensor, refrigerating cycle part, or fan system part)>
Disconnect the connector [CN03] for outdoor-outdoor communication (BUS2) provided on the interface P.C. board.

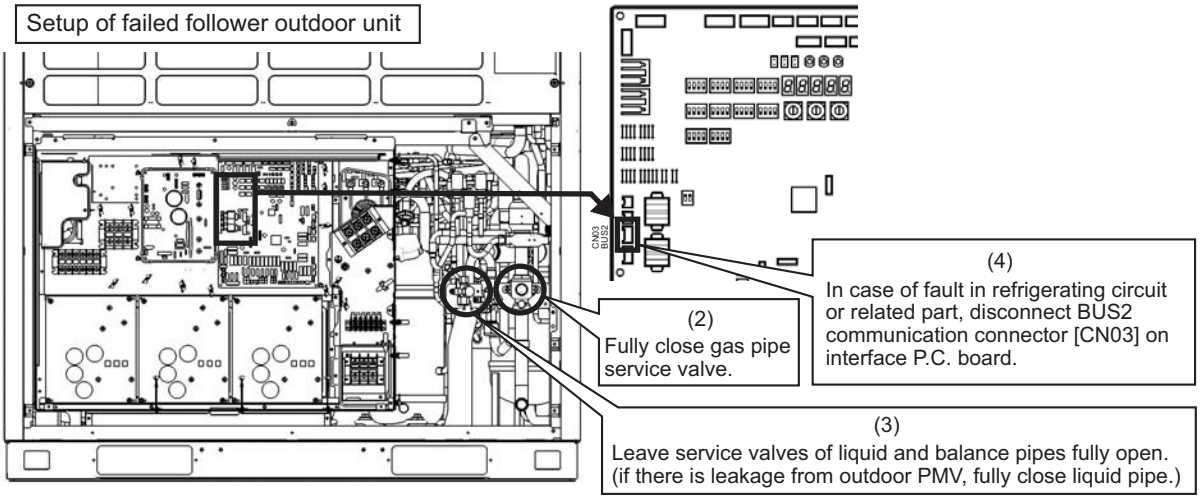

[Selection of new header unit]

(5) Select a new header unit from the follower units on the basis of the following criteria:

- If only one follower unit is connected, select it as the header unit.
- If two or more follower units are connected, select the follower unit that is nearest to the failed header unit.

[Setup of new header unit]

(6) Set SW13 and SW14 on the interface P.C. board same as the setting of failed header unit (refrigerant line address setting).

(7) Turn on Bit 2 of SW09 on the interface P.C. board. (Setting to prevent connected indoor unit capacity over error. (E16))

(8) Set Bits 1 and 2 of SW30 on the interface P.C. board same as that of the failed header unit (terminator resistance setting).

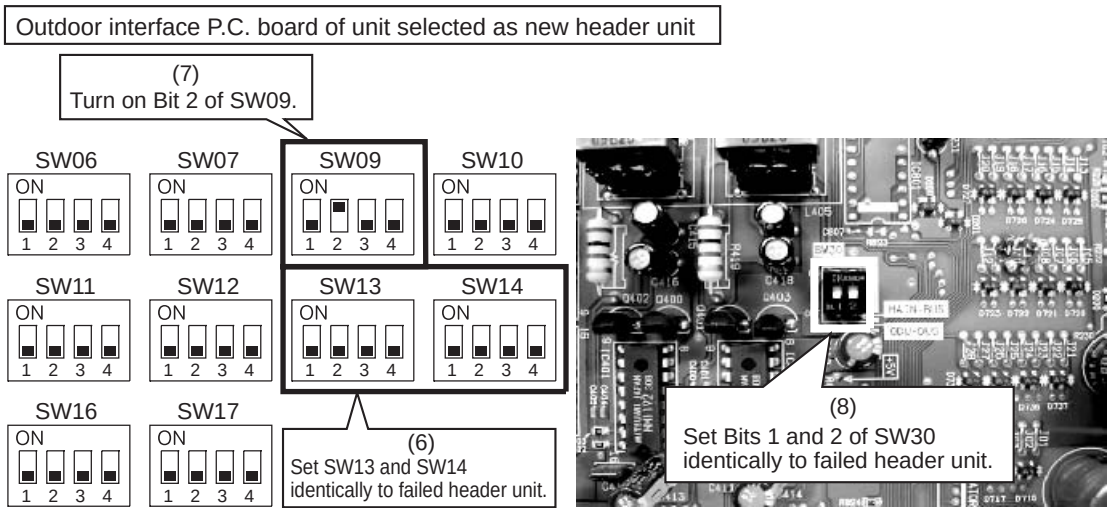

[Wiring changes to communication line]

(9) Redirect the indoor-outdoor communication line connected to the failed header unit [U1/U2] to the unit selected as the header unit [U1/U2].

(10) If a central control device is connected, connect the central control communication line [U3/U4] to the communication line terminal of the unit selected as the new header unit [U3/U4], and connect up the tie connector between the [U1/U2] and [U3/U4] terminals.

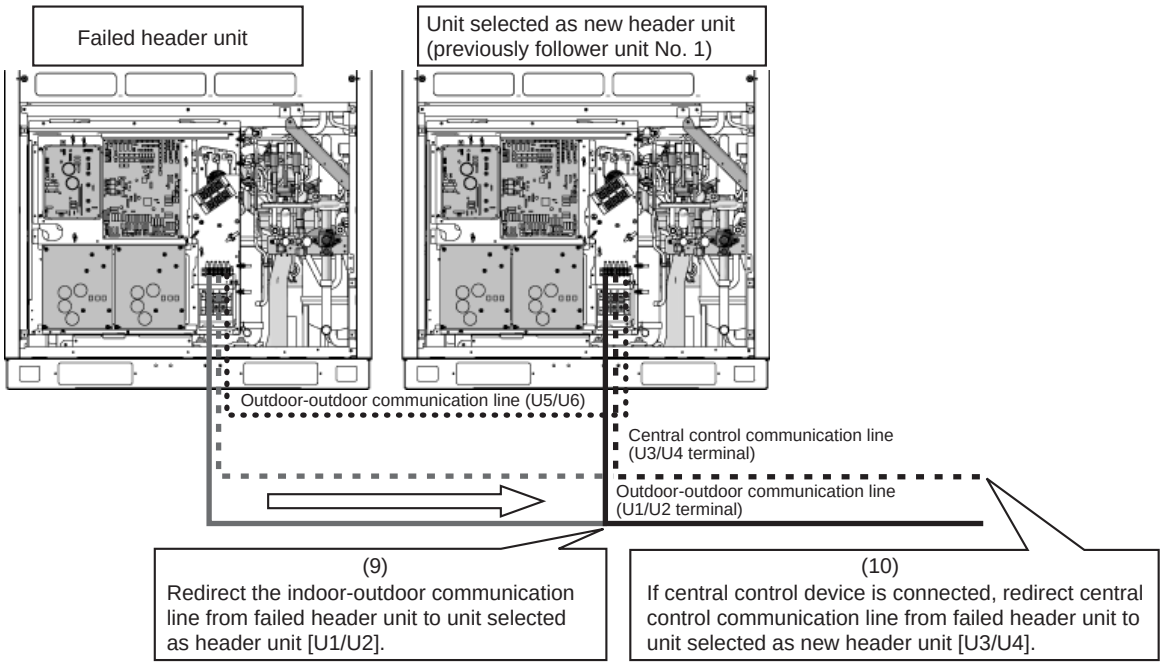

(11) Turn on the power supply to all the units connected to the system other than the failed unit.

Determine what to do with the power supply to the failed unit in the following manner.

<In case of fault in compressor, electrical part, I/F P.C. board, or IPDU P.C. board>

Leave the power supply off.

<In case of fault in refrigerating circuit or related part (pressure sensor, temperature sensor, refrigerating cycle part, or fan system part)>

Turn on the power supply to protect the compressor (by turning on the case heater).

(When the power supply to the unit is turned on, [E19] (error in the number of outdoor header units) will be displayed on the 7-segment display. However, this will not cause any problems.)

This is the end of header outdoor unit backup operation setting. Check the operation.

10-4. Cooling-season outdoor unit backup operation setting

<Outline>

Limited to summer and other situations where there is no need for heating operation, this function makes it possible to get backup operation up and running quickly without going through the normal setup procedure, regardless of which type of outdoor unit has failed, the header unit or a follower unit.

In this backup operation, the system behaves in exactly the same way as described in the “Outdoor Unit Backup Operation Setting” section, except that it cannot perform heating operation.

Note 1: When the system is set up for this function, heating operation is not available.
(The HEAT mode on the remote controller cannot be selected.)

Note 2: If the unit failure has been caused by a fault in the interface P.C. board or electric circuit, this function is not available. In that case, follow the procedure specified in the “Outdoor Unit Backup Operation Setting” section.

<Work procedure>

(1) Turn off the power supply to all the units connected to the system.

[Setup of failed outdoor unit]

Regardless of whether the failed outdoor unit is the header unit or a follower unit, there is no difference in the setup procedure.

(2) Turn on Bits 1, 2 and 3 of SW06 provided on the interface P.C. board.

(3) If there is a leakage from an outdoor PMV (unable to close), fully close the liquid pipe service valve.

(4) Turn on the power supply to all the units connected to the system.
If the fault involves poor insulation of a compressor motor, remove the compressor leads before the power is turned on.

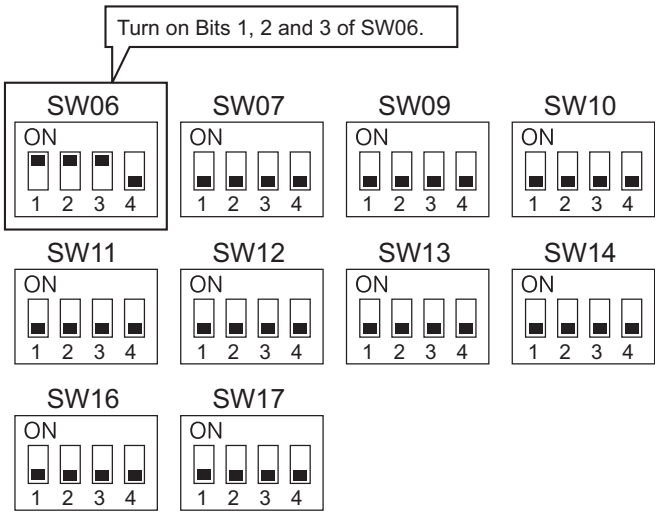

This is the end of cooling-season outdoor unit backup operation setting.

11 Outdoor Unit Refrigerant Recovery Method

11-1. Refrigerant recovery from failed outdoor unit (pump-down)

This product supports refrigerant pump-down, a function which allows refrigerant to be recovered from an outdoor unit in need of repair using a normal outdoor unit in a system featuring multiple outdoor units.

11-1-1. Note for refrigerant recovery operation

When performing pump-down operation, take note of the following matters:

Note 1: The pump-down refrigerant recovery rate changes with outside temperature and other factors.
After pump-down is completed, recover any residual gas using a refrigerant recovery device, etc., and be sure to measure the amount of recovered refrigerant. (The refrigerant recovery rate can be improved by heating the accumulator of the outdoor unit to be repaired during pump-down operation.)

Note 2: If pump-down has been performed, the system cannot be operated until the faulty outdoor unit is repaired.
(Continued operation would be impossible due to a refrigerant overcharge.)

Note 3: If outdoor PMVs 1 and 2 both happen to be faulty (unable to open) or PMV 4 fails while fully closed, the refrigerant in the heat exchangers (or sub-heat exchangers) cannot be recovered. In that case, recover any residual gas in the heat exchangers (or sub-heat exchangers) using a tube piercing valve or some other tool. After a pump-down operation, do not perform any welding until the residual gas in the heat exchangers is recovered.

11-1-2. Refrigerant recovery procedure A (case of no outdoor unit backup operation setting)

<Work procedure>

Turn on the power supply to the system at the source, but leave the system switched off.
If the fault involves poor insulation of a compressor motor, remove the motor leads before the power is turned on.

[Setup of failed outdoor unit]

(1) Connect the check joint of liquid pipe and the low pressure-side check joint using a charge hose, and purge the hose of air (to recover refrigerant from the liquid tank and heat exchangers).

(2) Fully close the liquid pipe service valve of the failed outdoor unit.
(Leave the service valves of the gas and balance pipes fully open.)

(3) If the oil is likely to has degraded due to a compressor fault, disconnect the SV3A valve connector of the failed outdoor unit (to prevent the degraded oil from flowing into other outdoor units).

(4) Set SW01/02/03 on the interface P.C. board of the failed outdoor unit to 2/11/1. After [rd] [… … …] is displayed on the 7-segment display, press SW04 and hold for 5 seconds or more.

(5) [rd] [… FF] will be displayed on the 7-segment display, and pump-down operation will start.

* To put the operation on hold midway, turn off the power supply to all the outdoor units, or press SW05 on the interface P.C. board.

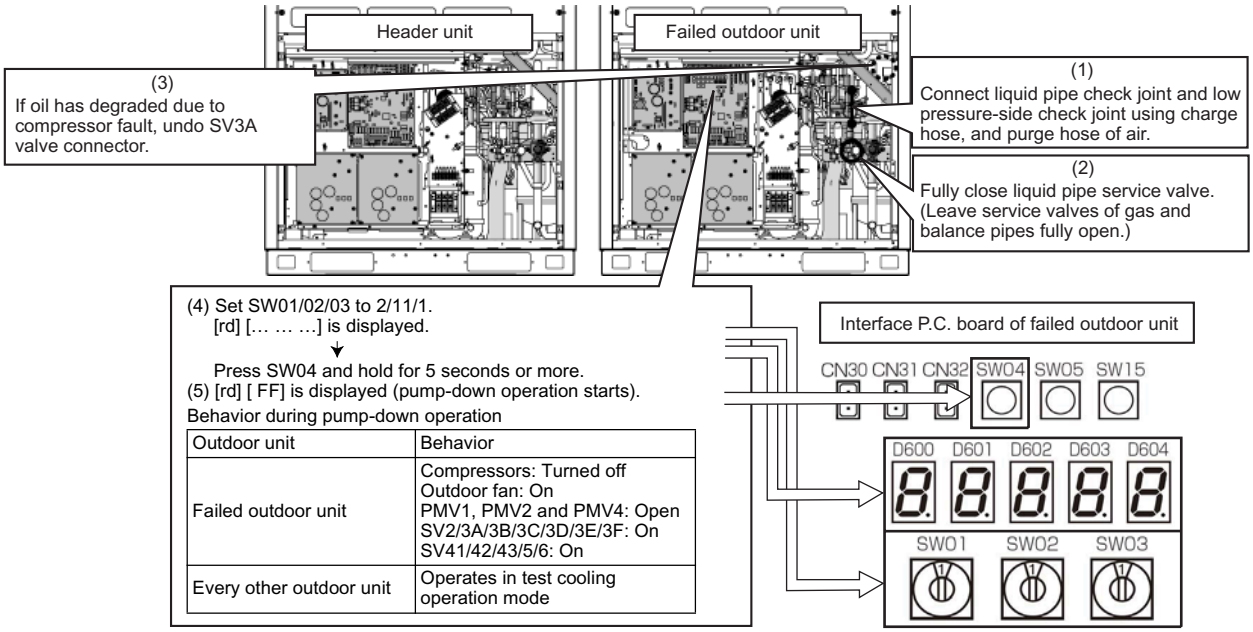

(6) Approx. 10 minutes after the system starts up, fully close the gas pipe service valve of the failed outdoor unit.

(7) Press SW04 of the failed outdoor unit to have pressure data (psi (MPa)) displayed.
(The display switches each time SW04 is pressed.)

Display Example

[rd] […11] → [Pd] [175 (1.20)] → [Ps] [175 (1.20)]
Initial display — High-pressure sensor output — Low-pressure sensor output

[Selection of outdoor unit for pressure adjustment]

(8) Of all outdoor units operating in the pump-down mode, select the one with the lowest unit No. as an outdoor unit for pressure adjustment.

Identifying Unit No.
The unit No. is the number displayed on the 7-segment display when SW01/02/03 are set to 1/1/1.
([U#] [– – –]: # represents the unit No.)

[Setup of outdoor unit for pressure adjustment]

(9) Set SW01/02/03 on the interface P.C. board of the outdoor unit for pressure adjustment to 1/2/2.

(10) As the low-pressure sensor output is displayed on the 7-segment display, adjust the pressure to around 17 psi (0.12 MPa) by slowly closing the gas pipe service valve, with checking pressure data.

(11) Compare the low-pressure sensor outputs of the failed unit with that of the unit for pressure adjustment, and wait until the two pressure readings become almost the same. After letting the system continue operating for a while longer, fully close the gas pipe service valve of the unit for pressure adjustment.

[Setup of failed outdoor unit]

(12) When the low-pressure sensor output of the failed outdoor unit falls below 14.5 psi (0.10 MPa), fully close the balance pipe packed valve, and press SW05 on the interface P.C. board to finish the pump-down operation.

(13) Turn off the power supply to all the outdoor units, and recover the residual refrigerant in the outdoor unit using a refrigerant recovery device. Be sure to measure the amount of recovered refrigerant. (This is necessary to determine how much additional refrigerant will be needed after the completion of the repair.)

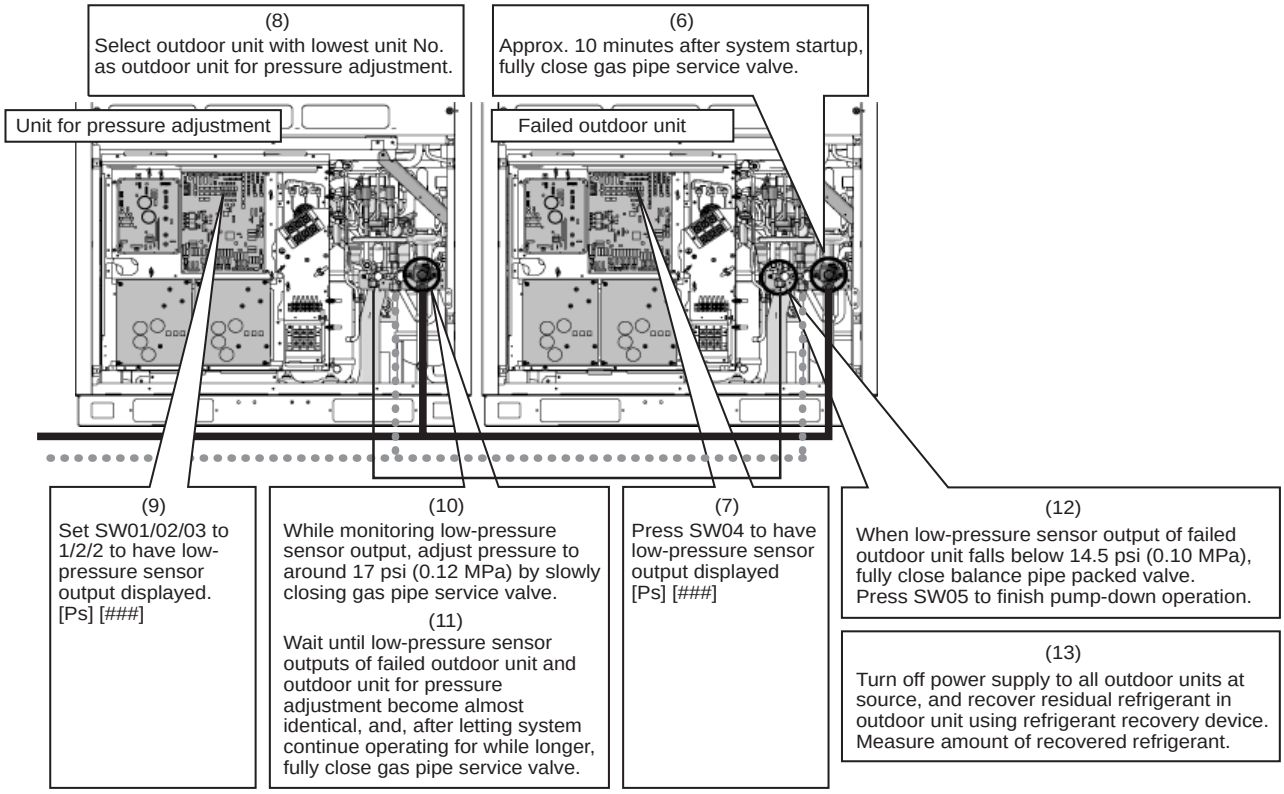

This is the end of the refrigerant recovery operation.

Set SW01/02/03 of the failed outdoor unit and the outdoor unit for pressure adjustment back to 1/1/1.

11-1-3. Refrigerant recovery procedure B (case of outdoor unit backup operation setting)

<Outline>

If outdoor unit backup operation setting is performed, use an alternative refrigerant recovery procedure as described below, provided that the power cannot be turned on for the failed outdoor unit. (Refrigerant will be recovered from the failed outdoor unit using the test cooling operation function.)

Note 1: If cooling-season outdoor unit backup operation or outdoor unit backup operation is in progress with the power supply to the failed outdoor unit turned on, follow the procedure described in “11-1-2. Refrigerant recovery procedure A (case of no outdoor unit backup operation setting)”. If outdoor unit backup operation setting is performed with the power supply to the failed outdoor unit turned on, recovery operation can only start after putting the outdoor-outdoor communication connector on the interface P.C. board of that unit [CN03] back to its initial state and resetting the power supply.

Note 2: If the power cannot be turned on the failed outdoor unit, the solenoid valves and PMVs of the unit cannot be turned on, so that it reduces the amount of recovered refrigerant compared to a standard pump-down operation. Recover the residual gas in the unit using a refrigerant recovery device, and be sure to measure the amount of recovered refrigerant.

<Work procedure>

[Setup of failed outdoor unit]

(1) Connect the liquid pipe check joint and the low pressure-side check joint using a gauge manifold, and purge the manifold of air (to recover refrigerant from the liquid tank and heat exchangers).

(2) Fully close the liquid pipe packed valve of the failed outdoor unit.
(Leave the service valve of the gas pipe and the packed valve of the balance pipe fully open.)

[Setup of unit selected as header unit (hereafter “header outdoor unit”)]

(3) Set SW01/02/03 on the interface P.C. board of the header outdoor unit to 2/5/1. After [C.] [… … …] is displayed on the 7-segment display, press SW04 and hold for 5 seconds or more.

(4) After [C. …] [… – C] is displayed on the 7-segment display, the system starts operating in the test cooling operation mode.

(5) Set SW01/02/03 on the interface P.C. board of the header outdoor unit to 1/2/2 to have the low-pressure sensor output (psi (MPa)) displayed on the 7-segment display.

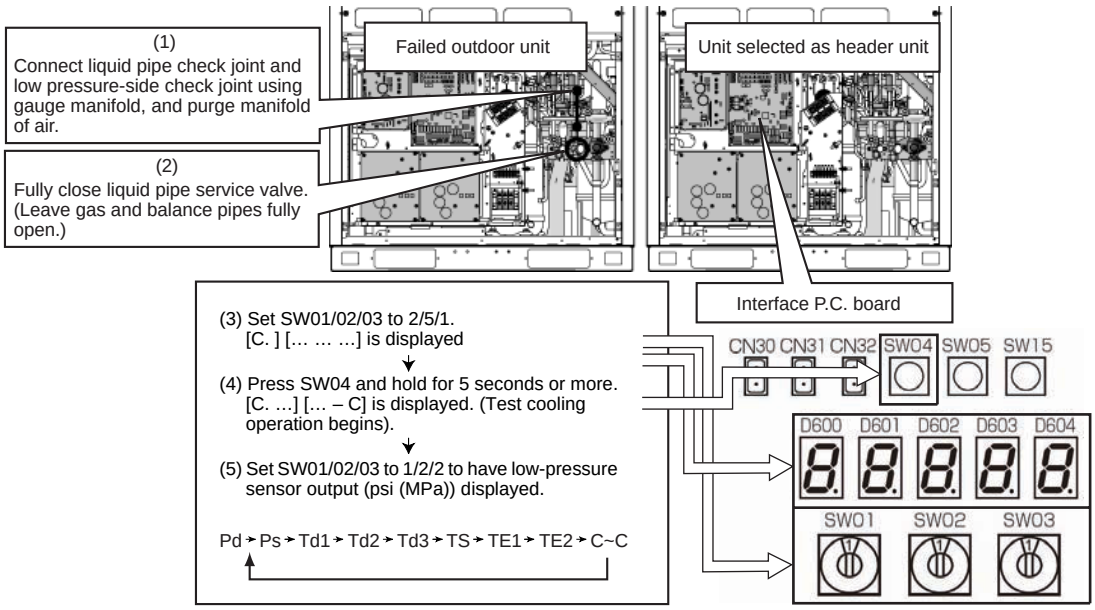

(6) Approx. 10 minutes after the system starts up, fully close the gas pipe service valve of the failed outdoor unit.

[Setup of outdoor unit for pressure adjustment]

(7) Select the header unit as the unit for pressure adjustment.

[Setup of header unit]

(8) While monitoring the low-pressure sensor output, adjust the pressure to around 17 psi (0.12 MPa) by slowly closing the gas pipe service valve.

(9) Compare the manifold gauge pressure of the failed unit with the low-pressure sensor output of the header unit, and wait until the two pressure readings become almost identical. After letting the system continue operating for a while longer, fully close the gas pipe service valve of the unit for pressure adjustment.

[Setup of failed outdoor unit]

(10) When the manifold gauge pressure of the failed outdoor unit falls below 14.5 psi (0.10 MPa), fully close the balance pipe packed valve, and press SW05 on the interface P.C. board to finish the test cooling operation.

(11) Turn off the power supply to all the outdoor units, and recover the residual refrigerant in the outdoor unit using a refrigerant recovery device. Be sure to measure the amount of recovered refrigerant. (This is necessary to determine how much additional refrigerant will be needed after the completion of the repair.)

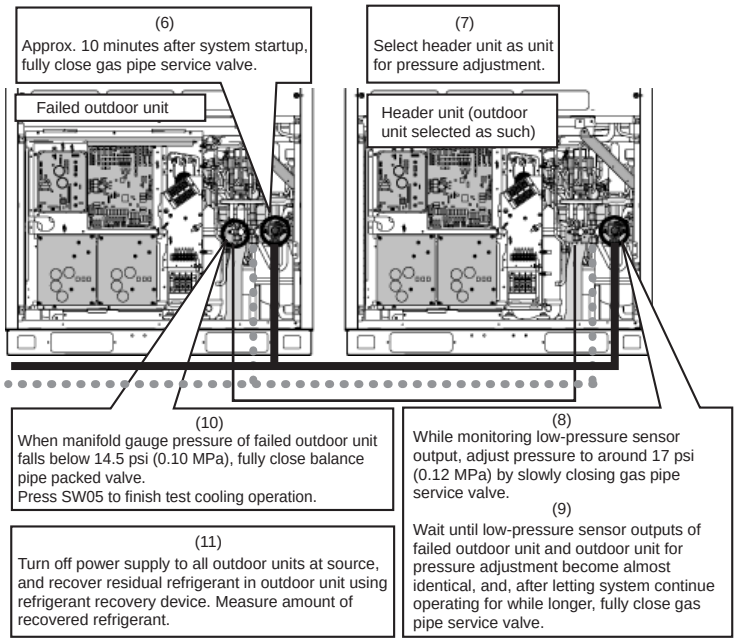

This is the end of the refrigerant recovery operation.
Set SW01/02/03 of the header unit back to 1/1/1.

11-2. How to operate system while failed outdoor unit being repaired

<Outline>

After refrigerant is recovered from the failed outdoor unit through a pump-down operation, the overall amount of refrigerant held by the system becomes excessive, and this makes it impossible to operate the remaining outdoor units even though they are not faulty. However, operation is still possible if the system-wide amount of refrigerant is adjusted in accordance with the procedure described below.

<Work procedure>

(1) Follow the steps specified in “11-1. Refrigerant recovery from failed outdoor unit (pump-down)”.

(2) Adjust the amount of refrigerant held by the system by removing some of it using a refrigerant recovery device, etc.

Determine the amount of refrigerant to be removed according to the capacity of the failed outdoor unit. (See the table below.)

Example: If a 114 type outdoor unit is under repair in a 228 type system:
Amount of refrigerant required by system as it was initially (228 type) = 78.3 lb (34.5 kg)
Amount of refrigerant required by system with available outdoor units only (114 type) = 40.8 lb (26.0 kg)
Amount of refrigerant to be removed from system = 78.3 (34.5) – 40.8 (26.0) = 37.5 lb (8.5 kg)

(3) Set up the outdoor unit from which refrigerant has been recovered in the manner described in “10-3. Outdoor unit backup operation setting”.

This completes the procedure.

Outdoor unit capacity type	Combined outdoor units		Amount of refrigerant (lb (Kg))
072 type	072 type	–	28.7 (13.0)
096 type	096 type	–	38.6 (17.5)
114 type	114 type	–	40.8 (18.5)
144 type	072 type	072 type	50.7 (23.0)
168 type	096 type	072 type	67.2 (30.5)
192 type	096 type	096 type	78.3 (35.5)
228 type	114 type	114 type	78.3 (35.5)

11-3. Work procedure after repair

When vacuuming in the repaired outdoor unit, follow the procedure described below.

<Work procedure>

(1) Fully open PMV1 and 2 and PMV4 (MMY-MAP0964HT9UL and MAP1144HT9UL only) in accordance with the table below.

Note: PMV full-opening operation via short-circuiting of the CN30 pins is automatically undone after 2 minutes, causing the valves to fully close. To maintain fully open state, turn off the power switch of the outdoor unit within 2 minutes of the short-circuiting of the CN30 pins.

SW12				CN30	PMV operation
Bit 1	Bit 2	Bit 3	Bit 4		
OFF	OFF	OFF	OFF	Short-circuit	PMV1 and 2 fully open for 2 minutes.
OFF	ON	OFF	OFF	Short-circuit	PMV4 fully opens for 2 minutes.

(2) Be sure to perform vacuuming in from the three check joints shown in the diagram below (liquid pipe, discharge pipe and suction pipe).

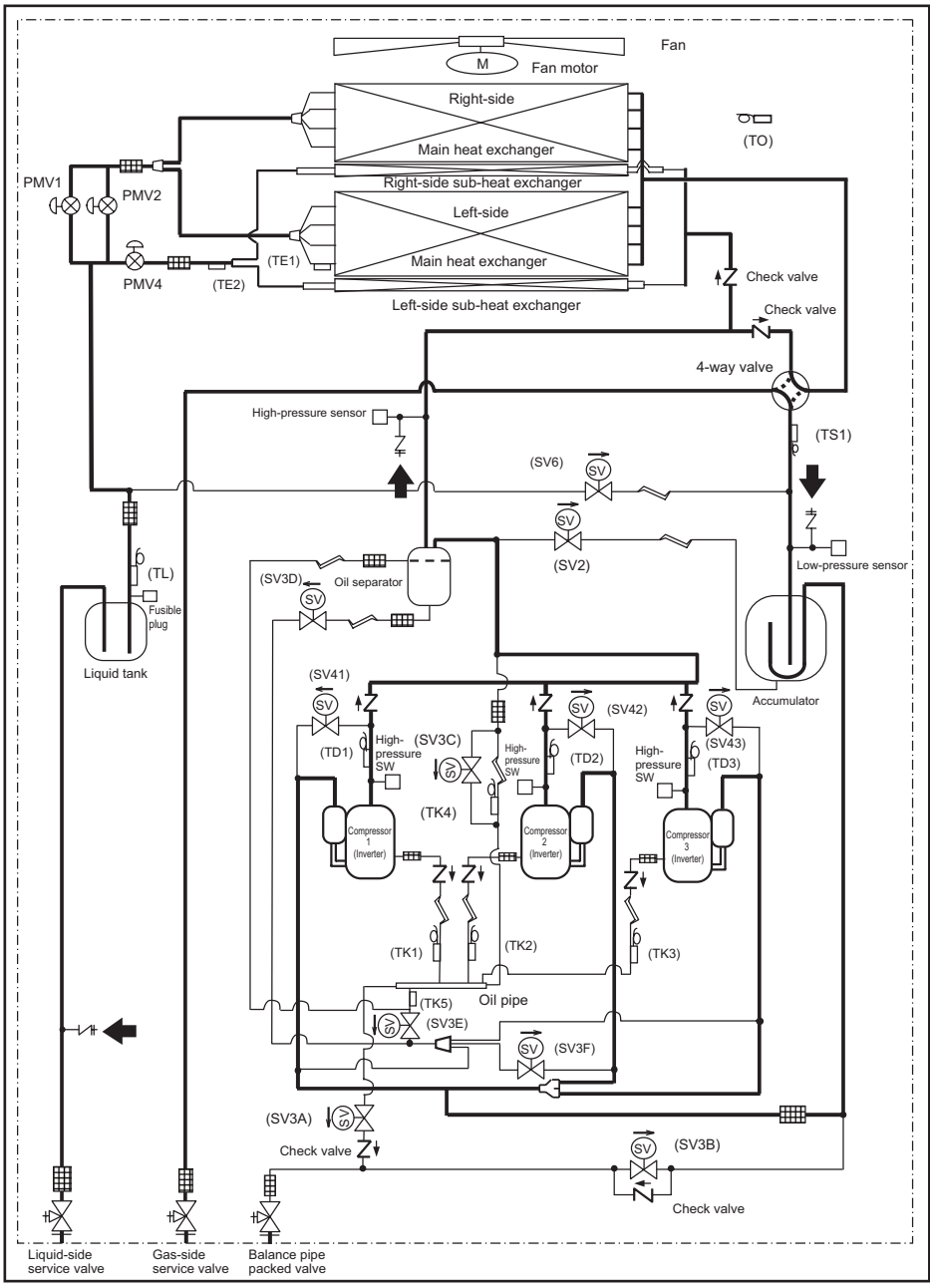

12 Replacing Compressors

12-1. Compressor replacement procedure (outline)

START

↓

Is the outdoor unit the only one in the system?

YES → Manually open PMV1, 2 and 4 of the failed unit (by short-circuiting the pins of CN30 on I/F P.C. board and turning off the power switch), and recover refrigerant using a refrigerant recovery device (*1).

NO → Recover refrigerant from the failed unit in accordance with “11 Outdoor Unit Refrigerant Recovery Method”.

↓

Turn off the power switch of the failed outdoor unit.

↓

Dismantle the faulty compressor.

↓

Measure the amount of oil in the faulty compressor.

↓

Check the color of the oil in the faulty compressor.
ASTM grade: Is it 4 or above?
(Judge the condition of the oil against color samples, and decide whether to replace the faulty compressor only or all compressors.)

NO → Replace the faulty compressor only.

YES ↓

Replace both the faulty compressor and the normal compressor(s).

↓

Measure the amount of oil in the normal compressor(s).

↓

Adjust the amount of oil according to the oil quantity measurement result(s).

↓

Install the new compressor(s)

↓

Perform a leakage check of the failed outdoor unit.

↓

Perform vacuum drying in the failed outdoor unit.

↓

Refrigerant charging

↓

END

⚠ WARNING

In situations such as indoor unit relocation and repairs, it is not possible to recover all the refrigerant held by the system in the outdoor units.
It could cause a serious accident, such as blow out or injury.
Be sure to perform refrigerant recovery using a refrigerant recovery device.

⚠ WARNING

When detaching a pipe by heating with a burner a welded joint, take care as any oil left in the piping may burn in a momentary flash of fire when the weld filler metal melts.

*1 The full-opening of PMV1, 2 and 4 via short-circuiting of the CN30 pins is automatically undone after 2 minutes, causing the valves to fully close. To maintain fully open state, turn off the power switch of the outdoor unit within 2 minutes.

This flowchart only shows the standard compressor replacement procedure. Since the situation can differ site by site, perform the task in accordance with the following judgment criteria:

(1) New compressors are charged with 0.502 gal (1900 cc) of oil per unit.

(2) The amount of oil held by an outdoor unit is as shown below.

	MAP0724	MAP0964, MAP1144
Amount of oil	1.136 gal (4300 cc)	1.770 gal (6700 cc)

(3) When a compressor is dismantled, it usually contains 0.211 gal (800 cc) - 0.370 gal (1400 cc) oil.
The amount of oil held by an oil separator is usually 0 - 0.264 gal (1000 cc) for MAP0724 and 0 - 0.370 gal (1500 cc) for MAP0964 and MAP1144.

12-2. Replacement of compressors

<Checking color of oil in faulty compressor>

- Lay the faulty compressor down, draw a small amount of oil via the oil equalization pipe, and check its color against color samples.
- Determine the number of compressors to be replaced according to the color checking result.
  ASTM grade: Below 4 → Replace the faulty compressor only.
  ASTM grade: 4 or above → Replace both the faulty compressor and the normal compressor(s).

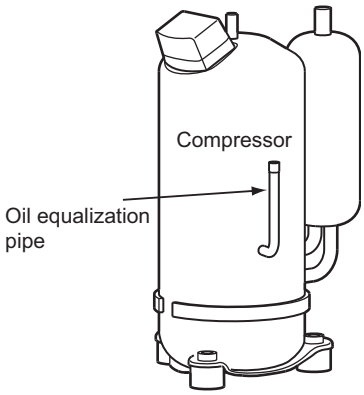

⚠ WARNING

When detaching a pipe by heating with a burner a welded joint, take care as any oil left in the piping may burn in a momentary flash of fire when the weld filler metal melts.

[When replacing faulty compressor only]

<Adjusting amount of oil in new compressor> (0.502 gal (1900 cc) at shipment)

- Perform the adjustment on the basis of how much oil the faulty compressor contained, A [gal (cc)], by following the steps below.

1 Amount of oil in faulty compressor A [gal (cc)]: 0 ≦ A < 0.264 (1000)

(1) Adjust the amount of oil in the new compressor to 0.264 gal (1000 cc).
(Lay the new compressor down and draw 0.238 (900) [gal (cc)] of oil via the oil-equalization pipe.)

Notes:

- Do not draw more than 0.238 (900) [gal (cc)] of oil as it may cause damage to the compressor.
- If the faulty compressor contained 0.132 (500) [gal (cc)] or less, there may have been a problem with the oil equalization circuit, etc. Perform checks in accordance with “12-3. Check procedure to search cause of compressor oil shortage”.

2 Amount of oil in faulty compressor A [gal (cc)]: 0.264 (1000) ≦ A < 0.502 (1900)

(1) Adjust the amount of oil in the new compressor to A gal (cc).
(Lay the new compressor down and draw (0.502 (1900) - A) [gal (cc)] of oil via the oil equalization pipe.)

3 Amount of oil in faulty compressor A [gal (cc)]: 0.502 (1900) ≦ A

(1) Adjust the amount of oil in the new compressor to A gal (cc).
(Insert a hose into the discharge pipe or oil equalization pipe of the new compressor and inject (A-0.502 (1900)) [gal (cc)] of oil using a funnel, etc.)

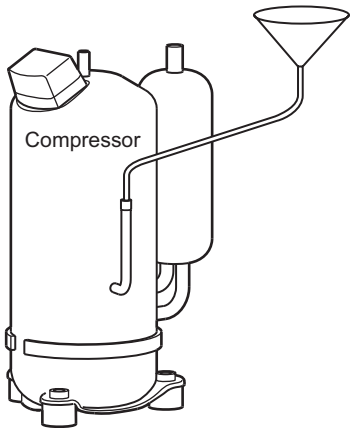

[When replacing normal as well as faulty compressor] - applicable to MMY-MAP0724HT9UL

<Dismantling normal compressor>

- Dismantle the normal compressor in the same way as the faulty compressor.

Note:

- Be sure to insulate the removed compressor leads using insulation tape, etc.

⚠ WARNING

When detaching a pipe by heating with a burner a welded joint, take care as any oil left in the piping may burn in a momentary flash of fire when the weld filler metal melts.

<Measuring amount of oil in normal compressor>

- As was the case with the faulty compressor, measure the amount of oil contained by placing the compressor on a scale.
  Amount of oil in normal compressor: B [gal (cc)] = (Weight of compressor as it was dismantled (lb (kg)) - 50.0 (22.7) × 0.1249 (1042) (Specific volume of oil: 0.1249 (1042) [gal/lb (cc/kg)])

Note:

- When a compressor is empty, it weighs 50.0 lb (22.7 kg).

<Adjusting amount of oil in new compressors>

- Perform the adjustment on the basis of how much oil the faulty compressor contained, A [gal (cc)], and how much oil the normal compressor contained, B [gal (cc)], by following the steps below.

1 Combined amount of oil in faulty and normal compressors A+B [gal (cc)]: 0 ≦ A+B < 0.528 (2000)

(1) Adjust the amount of oil in the two new compressors to 0.264 (1000) each (total 0.528 (2000)).

- Lay the compressors down and draw 0.238 (900) [gal (cc)] of oil from each of them via their oil equalization pipes.

Notes:

- Do not draw more than 0.238 (900) [gal (cc)] of oil from a compressor as it may cause damage.
- If the faulty compressor contained 0.132 (500) [gal (cc)] or less, there may have been a problem with the oil equalization circuit, etc. Perform checks in accordance with “12-3. Check procedure to search cause of compressor oil shortage”.

2 Combined amount of oil in faulty and normal compressors A+B [gal (cc)]: 0.528 (2000) ≦ A+B < 1.004 (3800)

(1) Adjust the amount of oil in the two new compressors to (A+B)/2 [gal (cc)] each.

- Lay the compressors down and draw [1.004 (3800) - (A+B)]/2 [gal (cc)] of oil from each of them via their oil equalization pipes.

3 Combined amount of oil in faulty and normal compressors A+B [gal (cc)]: 1.004 (3800) ≦ A+B

(1) Adjust the amount of oil in the two new compressors to (A+B)/2 [gal (cc)] each.
(Insert a hose into the discharge pipe or oil equalization pipe of each compressor and inject (A+B)/2 - 0.502 (1900) [gal (cc)] of oil using a funnel, etc.)

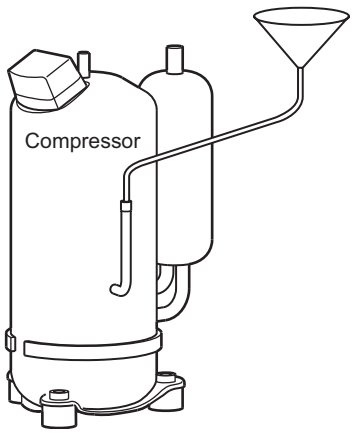

[When replacing normal as well as faulty compressors] - applicable to MMY-MAP0964HT9UL and MAP1144HT9UL

<Dismantling normal compressors>

- Dismantle the normal compressors in the same way as the faulty compressor.

Note:

- Be sure to insulate the removed compressor leads using insulation tape, etc.

⚠ WARNING

When detaching a pipe by heating with a burner a welded joint, take care as any oil left in the piping may burn in a momentary flash of fire when the weld filler metal melts.

<Measuring amounts of oil in normal compressors>

- As was the case with the faulty compressor, measure the amount of oil contained by placing each compressor on a scale.
  Amount of oil in normal compressor: B, C [gal (cc)] = (Weight of compressor as it was dismantled (lb (kg)) - 50.0 (22.7) × 0.1249 (1042)
  (Specific volume of oil: 0.1249 (1042) [gal/lb (cc/kg)])

Note:

- When a compressor is empty, it weighs 50.0 lb (22.7 kg).

<Adjusting amount of oil in new compressors>

- Perform the adjustment on the basis of how much oil the faulty compressor contained, A [gal (cc)], and how much oil the normal compressors contained, B and C [gal (cc)], by following the steps below.

1 Combined amount of oil in faulty compressor and two normal compressors A+B+C [gal (cc)]: 0 ≦ A+B+C < 0.8 (3000)

(1) Adjust the amount of oil in the three new compressors to 0.3 (1000) gal (cc) each (total 0.8 (3000) gal (cc)).

- Lay the compressors down and draw 0.2 (900) [gal (cc)] of oil from each of them via their oil equalization pipes.

Notes:

- Do not draw more than 0.2 (900) [gal (cc)] of oil from a compressor as it may cause damage.
- If the faulty compressor contained 0.1 (500) [gal (cc)] or less, there may have been a problem with the oil equalization circuit, etc. Perform checks in accordance with “12-3. Check procedure to search cause of compressor oil shortage”.

2 Combined amount of oil in faulty compressor and two normal compressors A+B+C [gal (cc)]: 0.8 (3000) ≦ A+B+C < 1.5 (5700)

(1) Adjust the amount of oil in the three new compressors to (A+B+C)/3 gal (cc) each.

- Lay the compressors down and draw [1.5 (5700) - (A+B+C)]/3 [gal (cc)] of oil from each of them via their oil equalization pipes.

3 Combined amount of oil in faulty compressor and two normal compressors A+B+C [gal (cc)]: 1.5 (5700) ≦ A+B+C

(1) Adjust the amount of oil in the three new compressors to (A+B+C)/3 gal (cc) each.
(Insert a hose into the discharge pipe or oil equalization pipe of each compressor and inject (A+B+C)/3 - 0.5 (1900) [gal (cc)] of oil using a funnel, etc.)

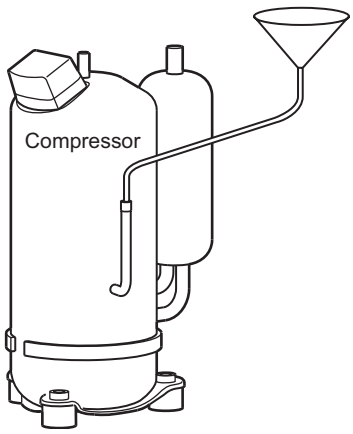

<Installing compressor>

- Install a compressor by following the dismantling procedure in reverse.
- The dismantling process may have loosened compressor leads and faston connectors. Prior to installation, therefore, tighten them a little with a pair of pliers, and verify that they are tight after reconnection.

Notes:

- Although a compressor is provided with only two hexagonal bolts, it is standard.
- The tightening torque of the hexagonal bolts, used to mount the compressor, is 200kg/cm.
- If oil has been drawn from the accumulator, repair the cut pipe through pinching and brazing.

<Vacuum-pumping>

(Single outdoor unit system)

- Before performing vacuum-pumping, fully open PMV1, 2 and 4. If they are closed, the heat exchangers of the outdoor unit cannot be vacuum-pumped.
- Connect a vacuum pump consecutively to the check joints placed in the liquid and discharge pipes and on the high-pressure side of the suction pipe, and turn it on.
- Operate the vacuum drying until the vacuum gauge indicates 1 mmHg.

<Method to fully open PMV manually>

(1) Turn on the power switch of the outdoor unit.

(2) With the Bits 1 and 2 of SW12 set to off, short-circuit the pins of CN30.

(3) Disconnect the connectors of PMV1 and 2 from the I/F P.C. board.

(4) With the Bits 1 and 2 of SW12 set to off and on, respectively, short-circuit the pins of CN30.

(5) Disconnect the connector of PMV4 from the I/F P.C. board

(6) Turn off the power switch of the outdoor unit.

Note: Steps (4) and (5) are not required for MMY-MAP0724HT9UL.

<Refrigerant charging>

- Inject the same amount of refrigerant as the recovered residual refrigerant via the charging port of the liquid-side service valve.

12-3. Check procedure to search cause of compressor oil shortage

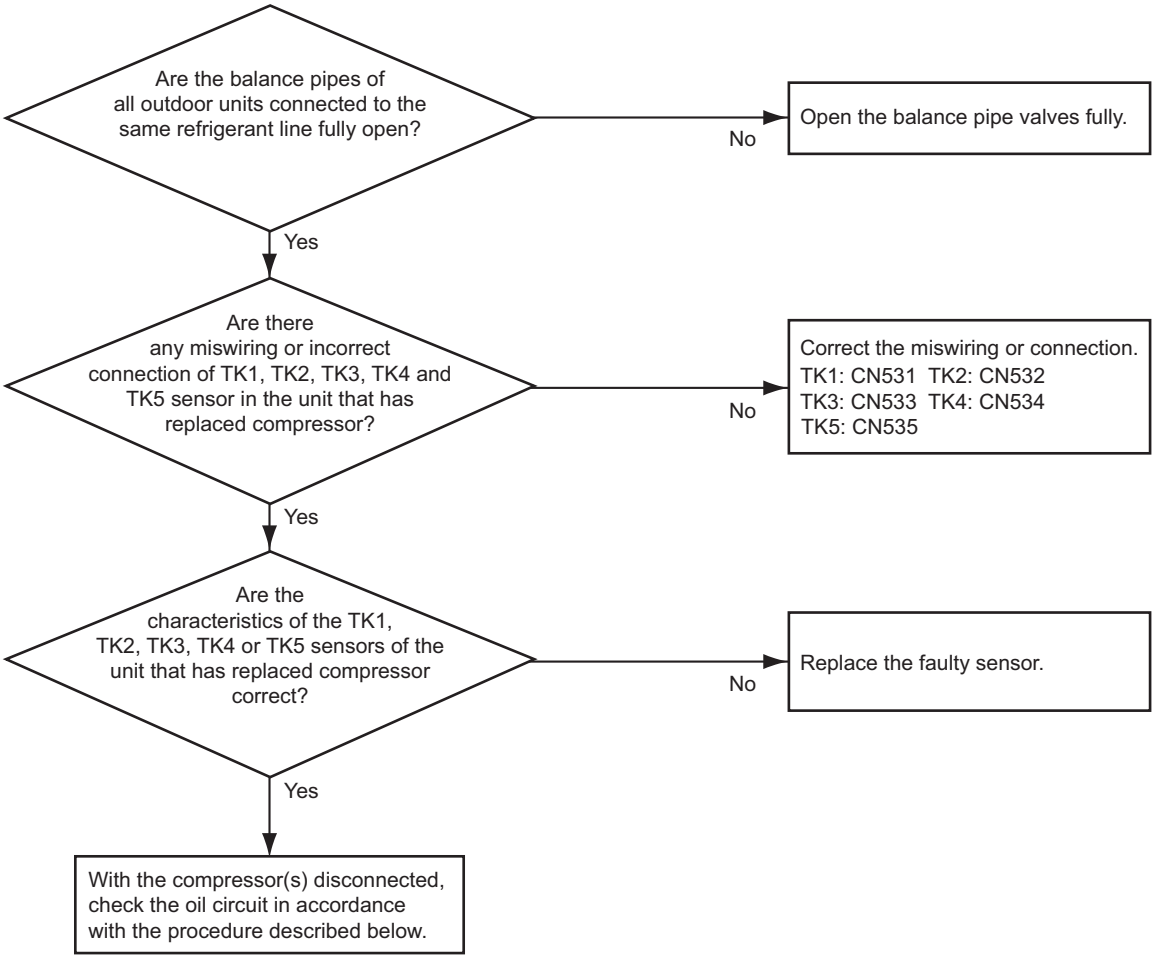

(To next page)

<MMY-MAP0964HT9UL and MAP1144HT9UL>

Check items and procedures to follow when checking oil circuit with compressor(s) disconnected

Check item	Location	Procedure
Leakage of outdoor PMV Leakage of check valve in discharge pipe convergent section	A,B C,D	1) With PMV1, 2 and 4 fully closed, apply pressure to the check joint of liquid pipe with nitrogen, and check the pressure at the check joint of discharge pipe. If the pressure at the check joint of discharge pipe increases, there is a leak from PMV1, 2 or 4 (A, B) and either discharge pipe check valve (C, D). Replace the faulty parts. 2) If the pressure does not increase, fully open outdoor PMV 1 and 2 and check the pressure at the check joint of discharge pipe again. If the pressure increases, there is a leak from the check valve of discharge pipe (D). Replace the part. With just PMV4 fully opened, check the pressure at the check joint of discharge pipe again. If the pressure increases, there is a leak from the check valve of discharge pipe (C). Replace the part.
Leakage of check valve in discharge pipe	E	3) With pressure applied to the check joint of discharge pipe with nitrogen, if gas escapes from the discharge pipe section of the disconnected compressor, there is a leak from the check valve of discharge pipe (E). Replace the part.
Leakage of check valve in oil equalization circuit	F	4) With pressure applied to the check joint of discharge pipe with nitrogen, if gas escapes from the oil equalization pipe section of the disconnected compressor, there is a leak from the oil equalization pipe check valve (F). Replace the part.
Leakage of SV3A valve	G	5) With pressure applied to the check joint of discharge pipe with nitrogen, manually open the SV3B valve. If gas escapes from the suction pipe section of the disconnected compressor, there is a leak from the SV3A valve. Replace the part.
Leakage of SV3B valve	H	6) Then manually open the SV3A valve. If gas escapes from the suction pipe section of the disconnected compressor, there is a leak from the SV3B valve. Replace the part.
Clogging of SV3E valve Clogging of oil-return distributor	I	7) With pressure applied to the check joint of discharge pipe with nitrogen, manually open the SV3E valve. If gas does not escape from the suction pipe section of the disconnected compressor, the SV3E valve or oil-return distributor is clogged. Replace the part.
Clogging of SV3D valve Clogging of oil-return capillary Clogging of oil-return distributor	J	8) With pressure applied to the check joint of discharge pipe with nitrogen, manually open the SV3D valve. If gas does not escape from the suction pipe section of the disconnected compressor, the SV3D valve, oil-return capillary or oil-return distributor is clogged. Replace the part.

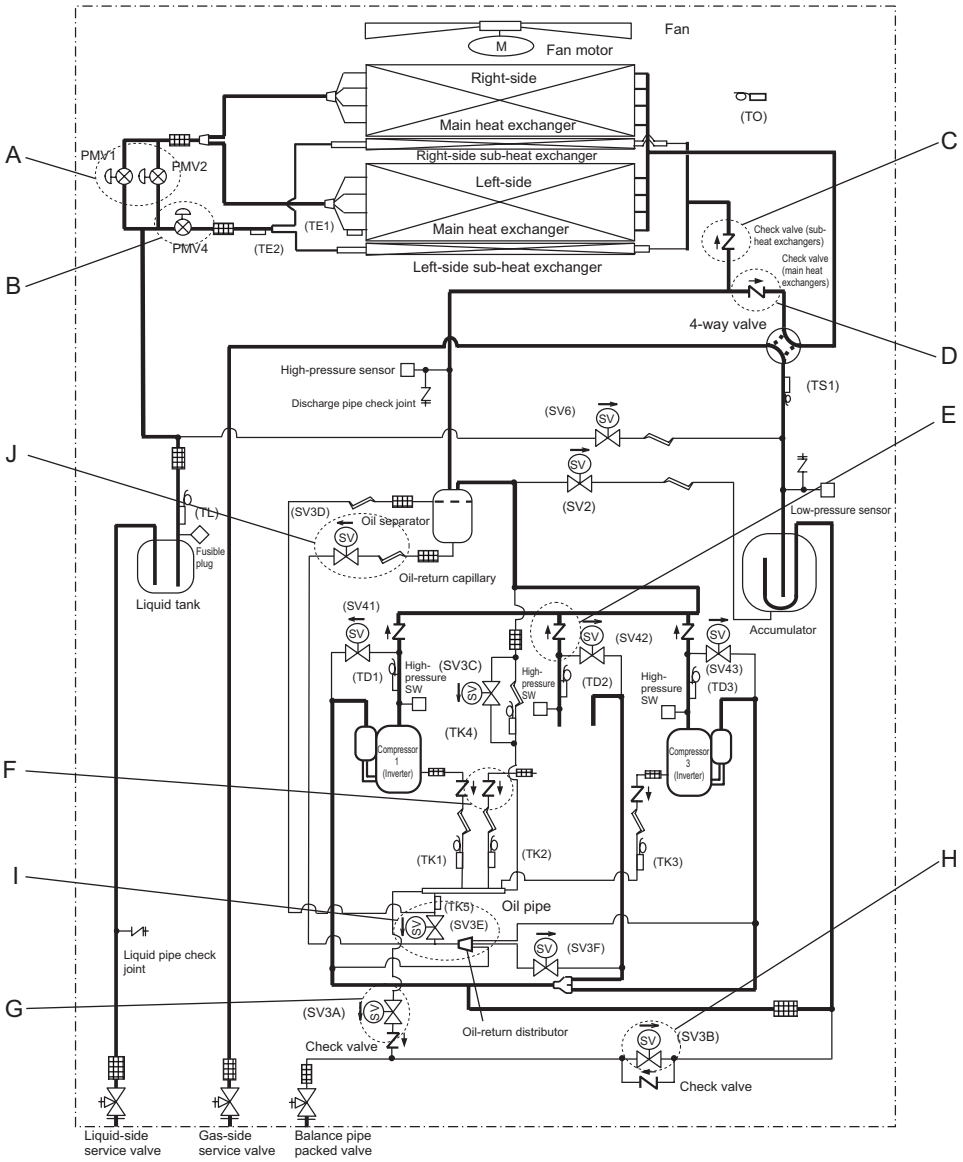

<MMY-MAP0964HT9UL>

Check items and procedures to follow when checking oil circuit with compressor(s) disconnected

Check item	Location	Procedure
Leakage of outdoor PMV Leakage of check valve in discharge pipe convergent section	A,C	1) With PMV1 and 2 fully closed, apply pressure to the check joint of liquid pipe with nitrogen, and check the pressure at the check joint of discharge pipe. If the pressure at the check joint of discharge pipe increases, there is a leak from PMV1 or 2 (A) and check valve of discharge pipe (C). Replace the faulty parts. 2) If the pressure does not increase, fully open outdoor PMV 1 and 2 and check the pressure at the check joint of discharge pipe again. If the pressure increases, there is a leak from the check valve of discharge pipe (C). Replace the part.
Leakage of check valve in discharge pipe	E	3) With pressure applied to the check joint of discharge pipe with nitrogen, if gas escapes from the discharge pipe section of the disconnected compressor, there is a leak from the check valve of discharge pipe (E). Replace the part.
Leakage of check valve in oil equalization circuit	F	4) With pressure applied to the check joint of discharge pipe with nitrogen, if gas escapes from the oil equalization pipe section of the disconnected compressor, there is a leak from the oil equalization pipe check valve (F). Replace the part.
Leakage of SV3A valve	G	5) With pressure applied to the check joint of discharge pipe with nitrogen, manually open the SV3B valve. If gas escapes from the suction pipe section of the disconnected compressor, there is a leak from the SV3A valve. Replace the part.
Leakage of SV3B valve	H	6) Then manually open the SV3A valve. If gas escapes from the suction pipe section of the disconnected compressor, there is a leak from the SV3B valve. Replace the part.
Clogging of SV3E valve Clogging of oil-return distributor	I	7) With pressure applied to the check joint of discharge pipe with nitrogen, manually open the SV3E valve. If gas does not escape from the suction pipe section of the disconnected compressor, the SV3E valve or oil-return distributor is clogged. Replace the part.
Clogging of SV3D valve Clogging of oil-return capillary Clogging of oil-return distributor	J	8) With pressure applied to the check joint of discharge pipe with nitrogen, manually open the SV3D valve. If gas does not escape from the suction pipe section of the disconnected compressor, the SV3D valve, oil-return capillary or oil-return distributor is clogged. Replace the part.

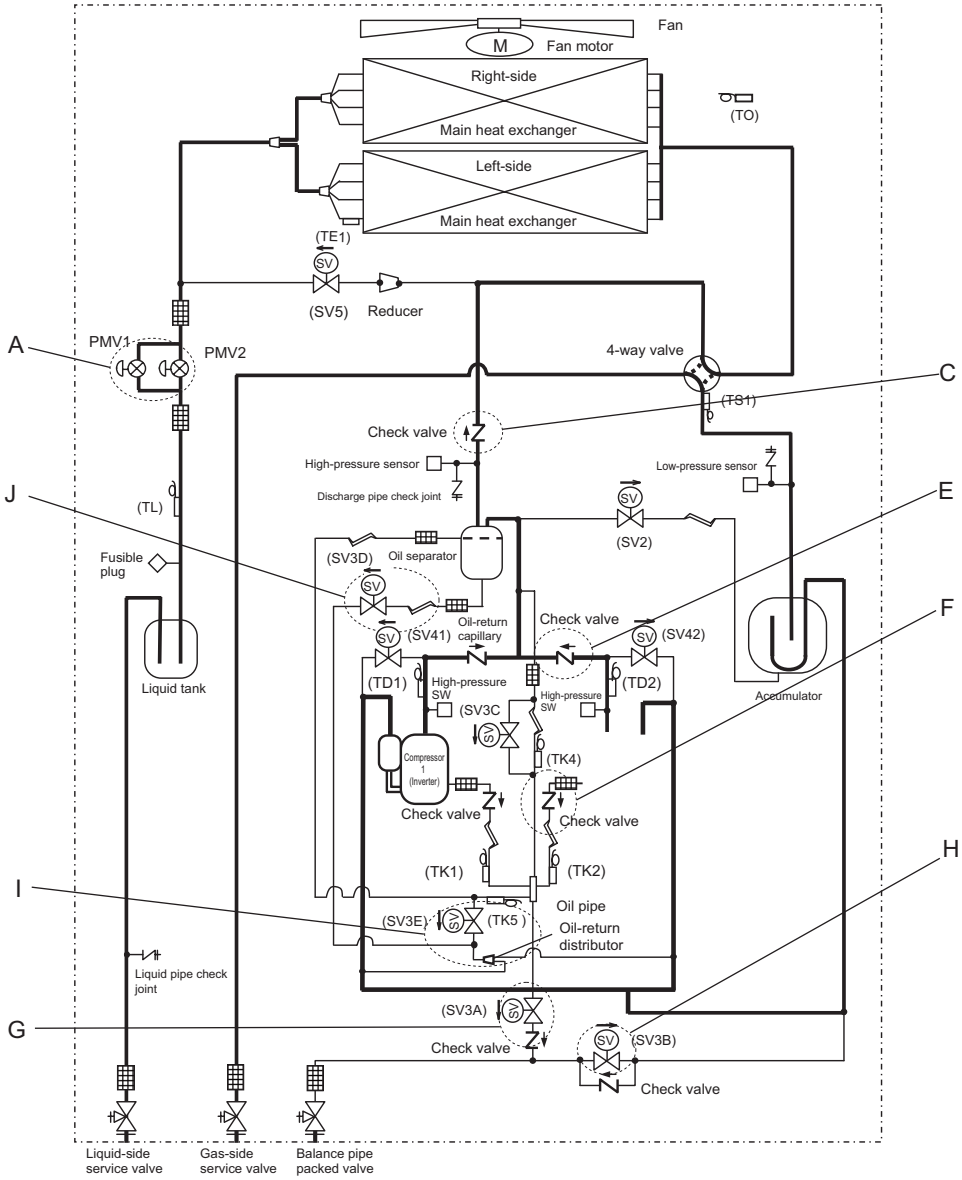

13 Outdoor Unit Parts Replacement Methods

No.	Part to be replaced	Work procedure	Remarks
1	Cabinet	**⚠ WARNING** **Wear a pair of gloves.** **Otherwise, you will risk an injury involving a replacement part or some other object.** **1. Detachment** 1) Stop the air conditioner operation, and turn off the circuit breaker. 2) Remove the screws for the discharge cabnet. (M5 × 0.4' (10 mm), 4 pcs.) For 096 type and 114 type, remove the screws from the discharge cabinet. (M5 × 0.6' (15 mm), 4 pcs.) For 096 type and 114 type, remove the screws from the left and right sides of the discharge cabinet. 3) Remove the screws for the lower cabinet. Front and rear: (M5 × 0.4' (10 mm), 7 pcs. for front and 6 pcs. for rear) 4) Remove the screws for the service panel. (M5 × 0.4' (10 mm), 2 pcs.) 5) Remove the screws for the suction cabinet. Front and rear: (M5 × 0.4' (10 mm), 4 pcs. each) In the case of a 096 type and 114 type: M5 × 0.4' (10 mm), 5 pcs. each 6) Remove the protective plate (back). Remove the upper hook from the middel partition plate, and then remove the lower hook from the center hole of the bottom plate. 7) Remove the screws for the discharge cabinet side cabinet. Left and right: (M5 × 0.4' (10 mm), 6 pcs. each)	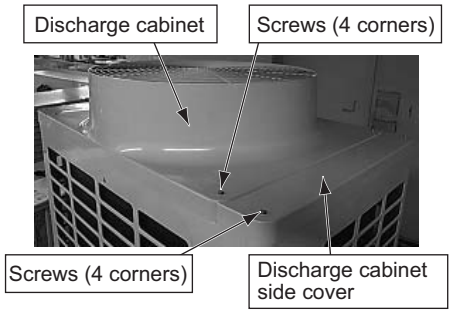 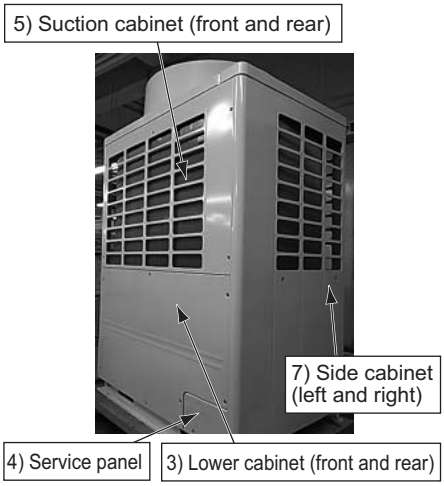 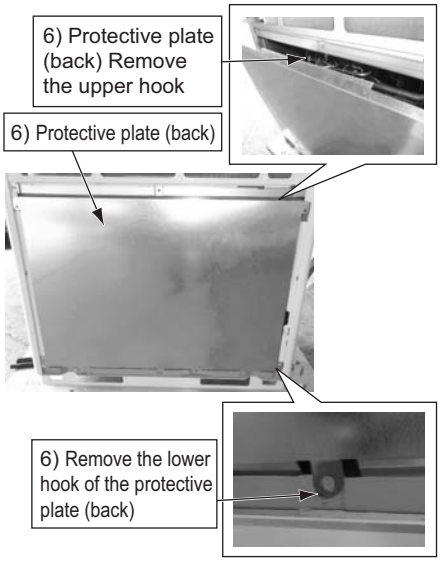

No.	Part to be replaced	Work procedure	Remarks
1	Cabinet (continued)	8) Remove the hook of the protective plate (side) from the hole of the middle partition plate. (2 locations) **2. Attachment** Carry out installation by following the detachment procedure in reverse (10) → 1)). Be careful of the hooks provided on the suction cabinet, service panel and lower cabinet.	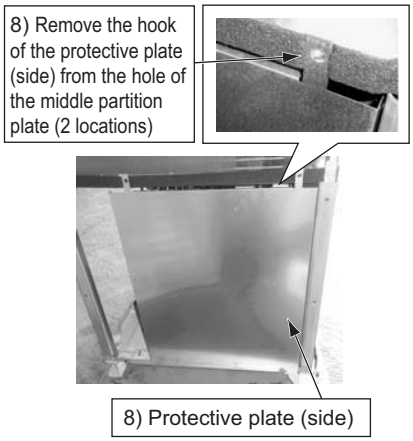 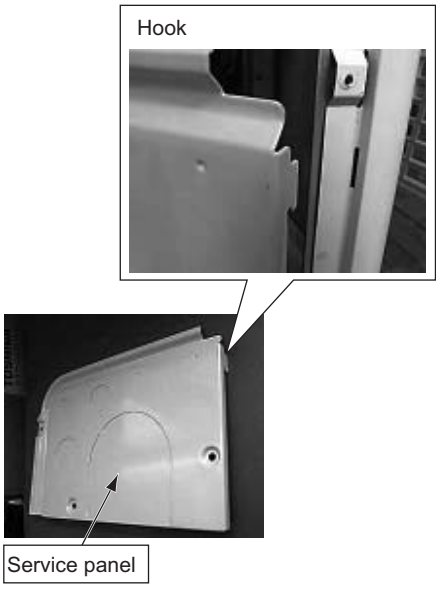

No.	Part to be replaced	Work procedure	Remarks
2	Propeller fan Fan motor	**⚠ WARNING** **Wear a pair of gloves.** **Otherwise, you will risk an injury involving a replacement part or some other object.** **1. Detachment** 1) Stop the air conditioner operation, and turn off the circuit breaker. 2) Remove the screws for the discharge cabinet. (M5 × 0.4' (10 mm), 4 pcs.) 3) Remove the heat exchanger partition plate (upper). (M5 × 0.4' (10 mm), 2 pcs.) * With a 096 type, 114 type, the fan motor can be replaced without removing the discharge cabinet side covers. 4) Remove the flange nut securing the fan motor and propeller fan. (To loosen the nut, turn it clockwise.) 5) Remove the square washer. 6) Remove the propeller fan. **⚠ CAUTION** **Lift it straight up.** **Do not forcibly pull it, or it may get stuck.**	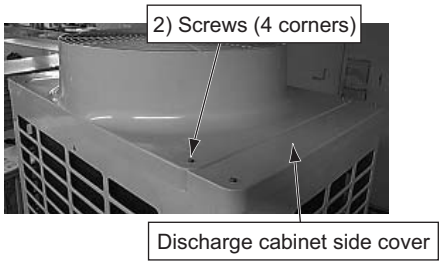 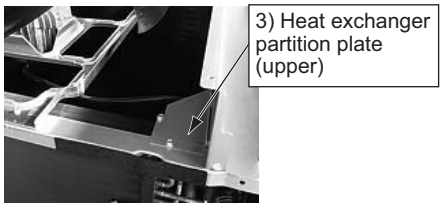 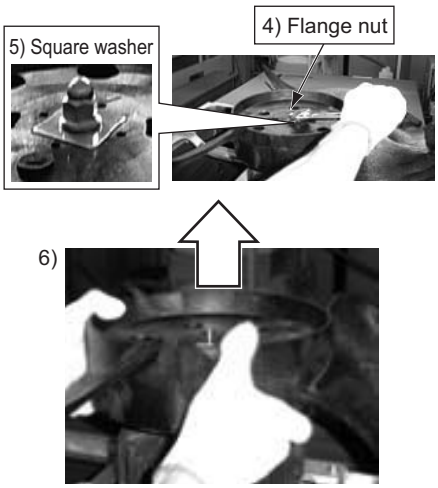

No.	Part to be replaced	Work procedure	Remarks
2	Propeller fan Fan motor (continued)	10)Disconnect the faston connectors for the fan motor leads (3 pieces) from the Fan IPDU, and pull the leads up and out. 11)Remove the fan motor. (M6 × 0.8' (20 mm), 4 pcs.) **2. CAUTION for replacement or attachment** 1) Insert the propeller fan while aligning the D-cut surface of the fan motor shaft with the arrow mark (△) on the fan. (If the propeller fan is tightly mounted on the shaft without securing alignment between the D-cut surface and the arrow mark (△), it may cause the fan to melt and fall off due to friction heat.) 2) Be sure to put the square washer in place. (Otherwise, unusual noises and vibrations may result.) 3) Tighten the flange nut at a torque of 11.1 ft•lbs (15 N•m). (To tighten the flange nut, turn it counterclockwise.)	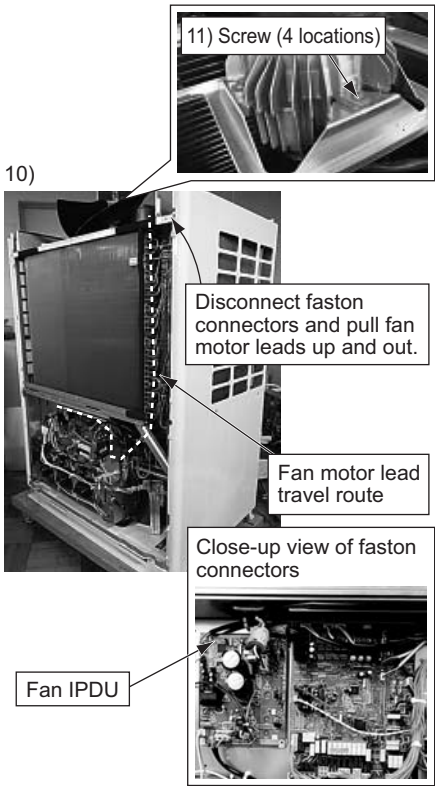

No.	Part to be replaced	Work procedure	Remarks
2	Propeller fan Fan motor (continued)	4) Remove the clamp filter from the fan motor with trouble, then attach the clamp filter to the substitution in the same way as before replacement. (Wind the fan motor lead once around the clamp filter.)	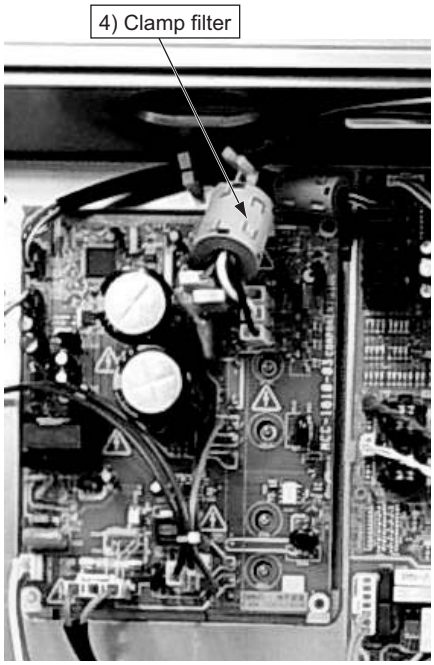

No.	Part to be replaced	Work procedure	Remarks
3	Heat exchanger	**⚠ WARNING** **Wear a pair of gloves.** **Otherwise, you will risk an injury involving a replacement part or some other object.** Before the work, be sure to recover the refrigerant of outdoor unit into cylinders or another unit connected to the same system. (Refer to the chapter on “refrigerant recovery methods to be used during compressor replacement”.) **1. Detachment (Right-Side Heat Exchanger as Example)** 1) Remove the cabinet. 2) Remove the motor base. (M5 × 0.4’ (10 mm), 6 pcs.) (Detach the fan motor leads as well.) With a 096 type, 114 type, remove the discharge cabinet anchor plates. Left and right: (M5 × 0.1’ (2 mm), 2 pcs.) - 2 sets 3) Remove the upper partition plate. (M5 × 0.1’ (10 mm), 5 pcs.) 4) Remove the screws for the support post. (M5 × 0.1’ (10 mm), 2 pcs.) 5) Remove the screws for the waterproof board. (M4 × 0.1’ (10 mm), 2 pcs.) 6) Remove the brazed joints of the piping connected (2 locations). With a 096 type, 114 type, also remove the brazed joints of the piping connected to the sub-heat exchanger (2 locations). 7) Remove the screws for the heat exchanger end plate and pull the heat exchanger out. (M5 × 0.1’ (10 mm), 2 pcs.)	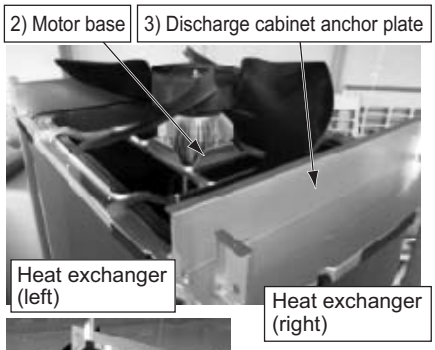 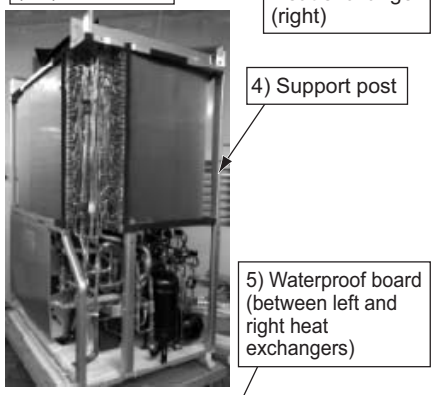 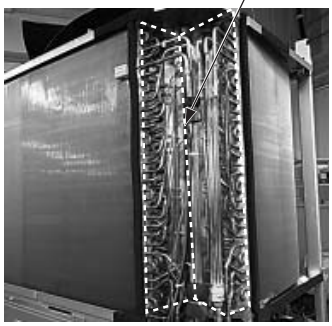 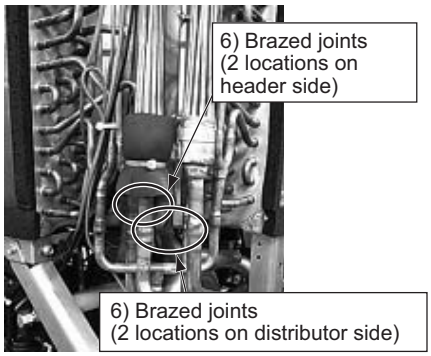 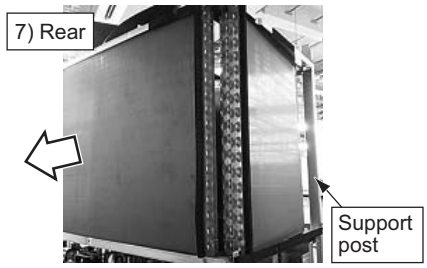 Pull heat exchanger out of rear end. (Left-side heat exchanger is pulled out of front end.)

No.	Part to be replaced	Work procedure	Remarks
4	Inverter assembly	**⚠ WARNING** **Wear a pair of gloves.** **Otherwise, you will risk an injury involving a replacement part or some other object.** **1. Detachment** 1) Stop the air conditioner operation, and turn off the circuit breaker. 2) Remove the inverter cover. (M4 × 0.1' (10 mm), 2 pcs.) 3) Remove the wiring. (e.g. the power supply wire, compressor leads, coils, sensors and heaters) 4) Steps only applicable to a 096 type, 114 type • Remove the reactor lead cover. (M4 × 0.1' (10 mm), 1 pc.) • Remove the screws securing the box. (M4 × 0.1' (10 mm), 1 pc.) • Detach the reactor leads. (6 terminal block bolts and 2 faston connectors) 5) Remove the wire guard. (M4 × 0.1' (10 mm), 1 pc.) 6) Remove the screws securing the box. (M5 × 0.1' (10 mm), 1 pc. each for top and bottom) In the case of a 096 type, 114 type: M5 × 0.1' (10 mm), 1 pc. for top and 2 pcs for bottom 7) Disengage the hook by gently pressing down the locking lever with your finger. (The lower part of the box moves forward.) 8) Hold the top board with both hands to disengage the top hook.	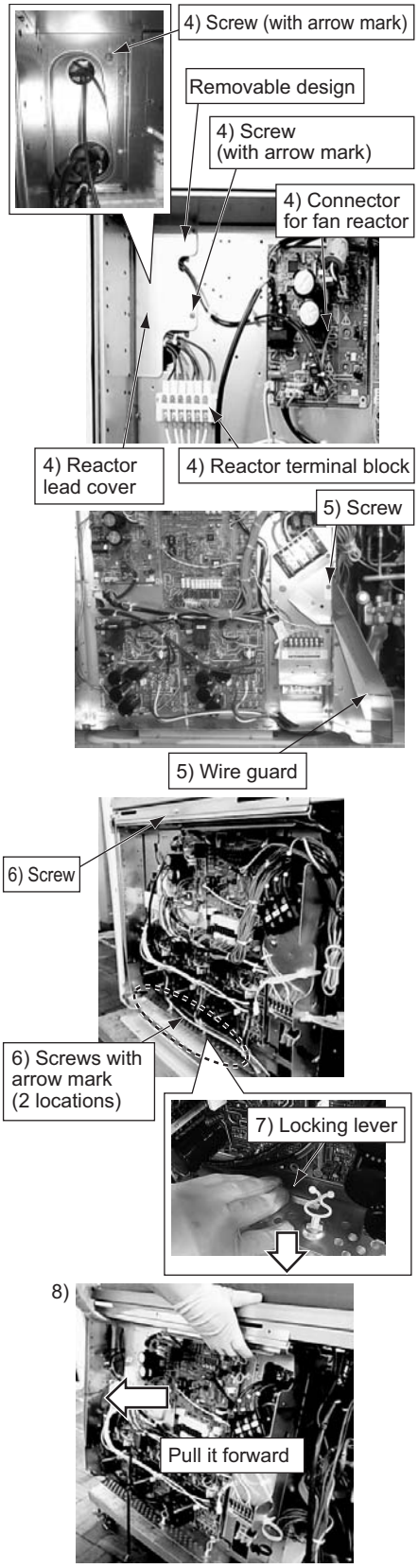

No.	Part to be replaced	Work procedure	Remarks
4	Inverter assembly (continued)	**2. Attachment** Carry out installation by following the dismantling procedure in reverse (8) → 1)). Before pushing the lower part in, pull the reactor leads out. Take care so that the wiring does not get caught in the way. Reconnect all the wiring.	Before pushing lower part in, pull leads out through hole. 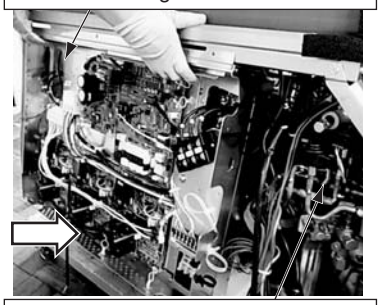 When pushing lower part in, be sure to keep wiring out of way.

No.	Part to be replaced	Work procedure	Remarks
5	Assembling inverter - Replacing boards / electric components	**⚠ WARNING** **Wear a pair of gloves.** **Otherwise, you will risk an injury involving a replacement part or some other object.** **1. I/F board** 1) Stop the air conditioner operation, and turn off the circuit breaker. 2) Remove the wires and then the board from the card edge spacer of the corner. **2. A3-IPDU board** 1) Stop the air conditioner operation, and turn off the circuit breaker. 2) Remove the screws that fix the heat sink (radiation plate). *1 (M4 x 0.6' (15 mm), 2 pcs, M3 x 0.8' (20 mm), 3 pcs.) 3) Remove the comp lead (U, V, W). *2 4) Remove the board from the card edge spacer of the corner. *1 Screw tightening torque for heat sink fixing board M4 screw tightening torque (0.7 ±1 ft•lbs (0.98 ±0.1 N•m)) M3 screw tightening torque (0.4 ±1 ft•lbs (0.55 ±0.1 N•m)) *2 Comp lead (U, V, W) tightening torque M4 screw tightening torque (0.9 ±1 ft•lbs (1.2 ±0.1 N•m)) **4. IPDU board for fan** 1) Stop the air conditioner operation, and turn off the circuit breaker. 2) Remove the screws that fix the heat sink (radiation plate). * (M3 x 0.8' (20 mm), 5 pcs.) 3) Remove the wires. 4) Remove the board from the card edge spacer of the corner. * Screw tightening torque for heat sink fixing board M3 screw tightening torque (0.4 ±1 ft•lbs (0.55 ±0.1 N•m)) * Notes on attaching. 5) Adjust the sub heat sink to the cutout. (If the sub heat sink is not aligned properly, radiation may be less efficient and a malfunction may occur.)	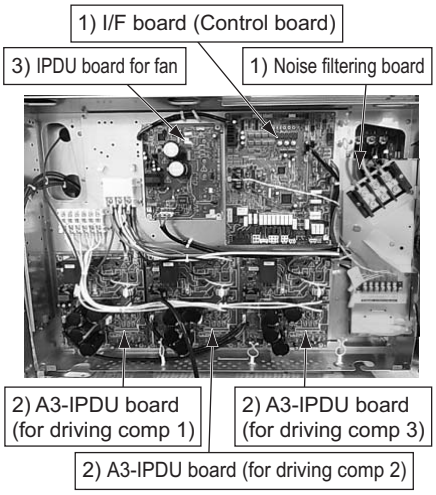 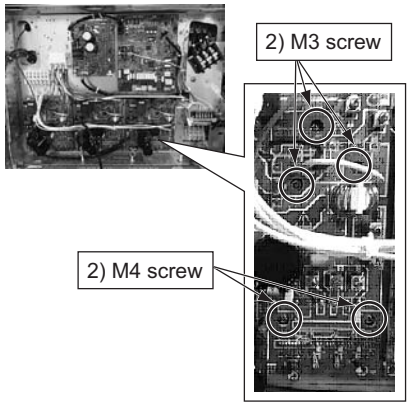 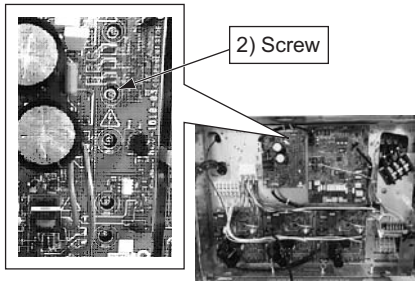 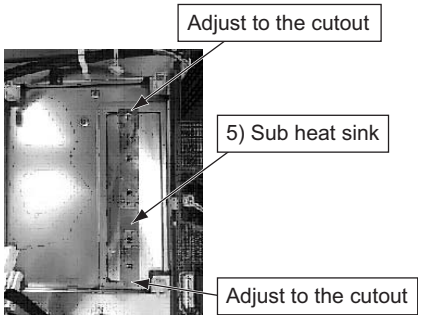

No.	Part to be replaced	Work procedure	Remarks
6	Reactor assembly	**⚠ WARNING** **Wear a pair of gloves.** **Otherwise, you will risk an injury involving a replacement part or some other object.** **1. Detachment** 1) Stop the operation, and turn off the circuit breaker. 2) Remove the inverter assembly. (See the inverter assembly dismantling method under item 5.) 3) With a 096 type, 114 type, remove the separately mounted reactor box. To remove the reactor box, remove the screws at the top and bottom (M5 × 0.4' (10 mm)) and unlock the box by sliding the stopper to the right. * Before pulling the reactor box, tilt it back to free the bottom. 4) Remove the reactor box located at the back of the inverter assembly. (M4 × 0.2' (6 mm), 4 pcs.) * The screws can be removed from the front. With a 096 type, 114 type, remove the separately mounted anchor plate. (M4 × 0.2' (6 mm), 4 pcs.) 5) Remove and replace the reactor. (M4 × 0.2' (6 mm), 1 pc.)	• 096 type, 114 type 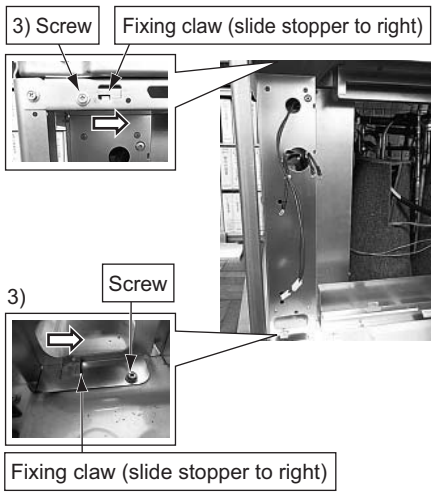 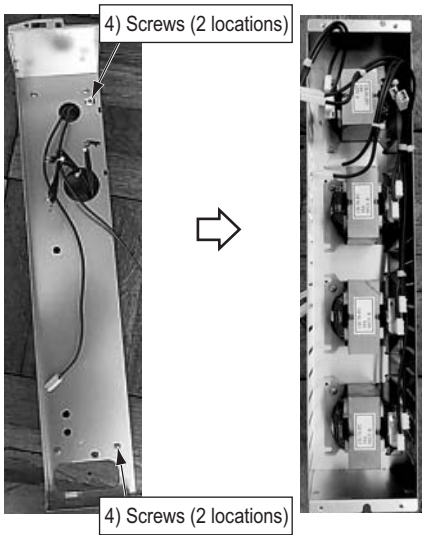 • 072 type 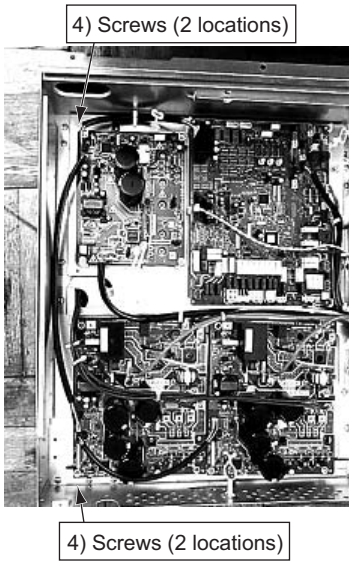

No.	Part to be replaced	Work procedure	Remarks
7	2-way valve coils Pressure sensors locations 072 type	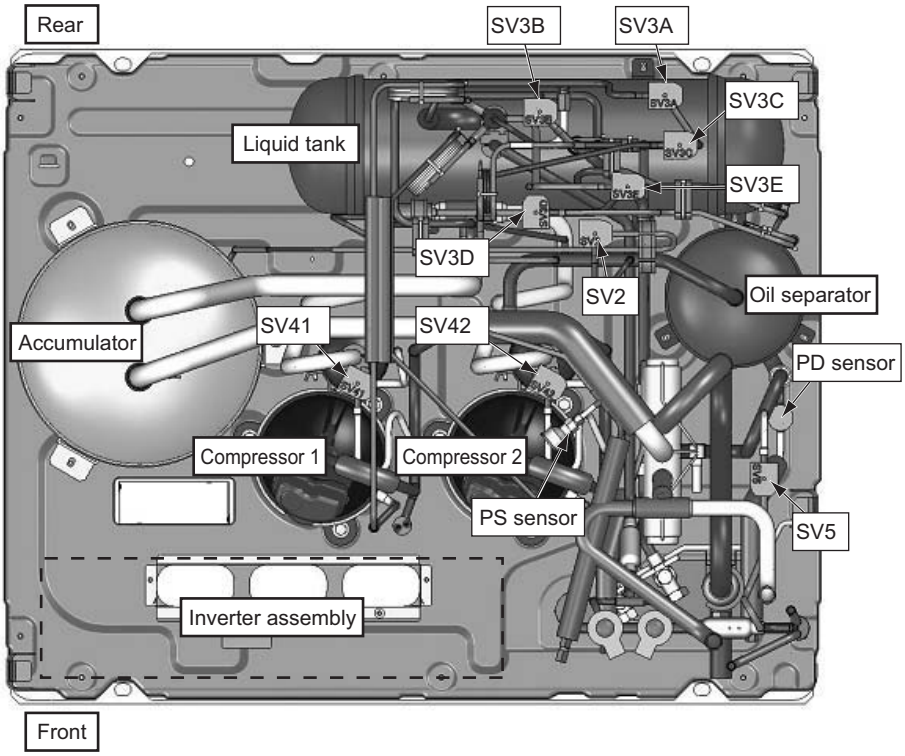	
	096 type 114 type	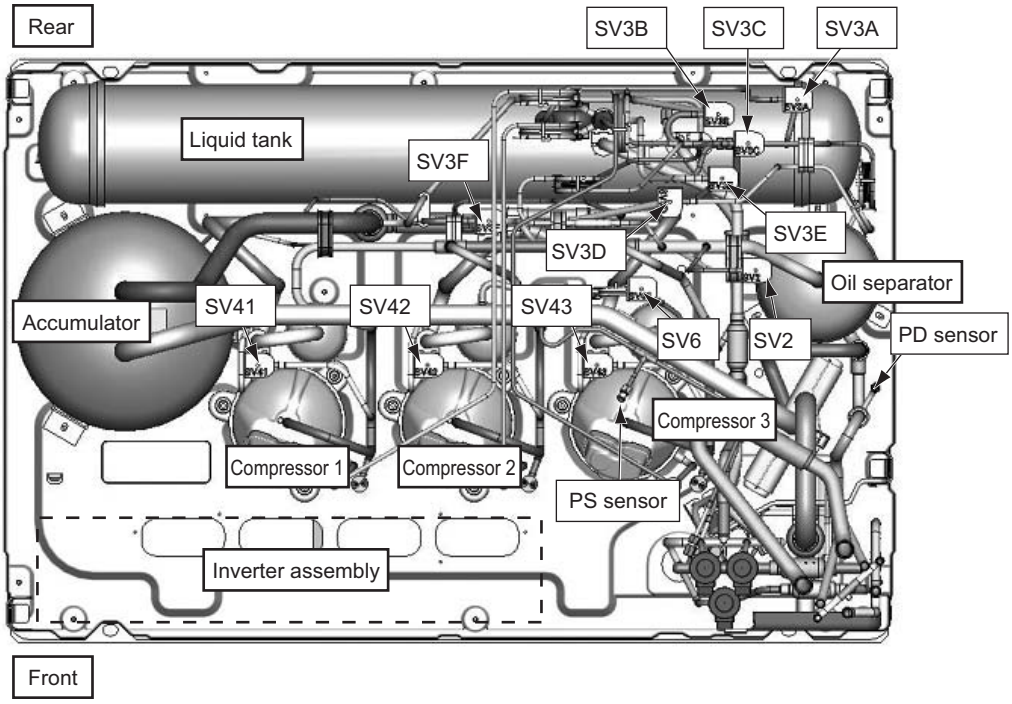	

No.	Part to be replaced	Work procedure	Remarks
8	Temperature sensors - locations and identification colors 072 type	Product Front View 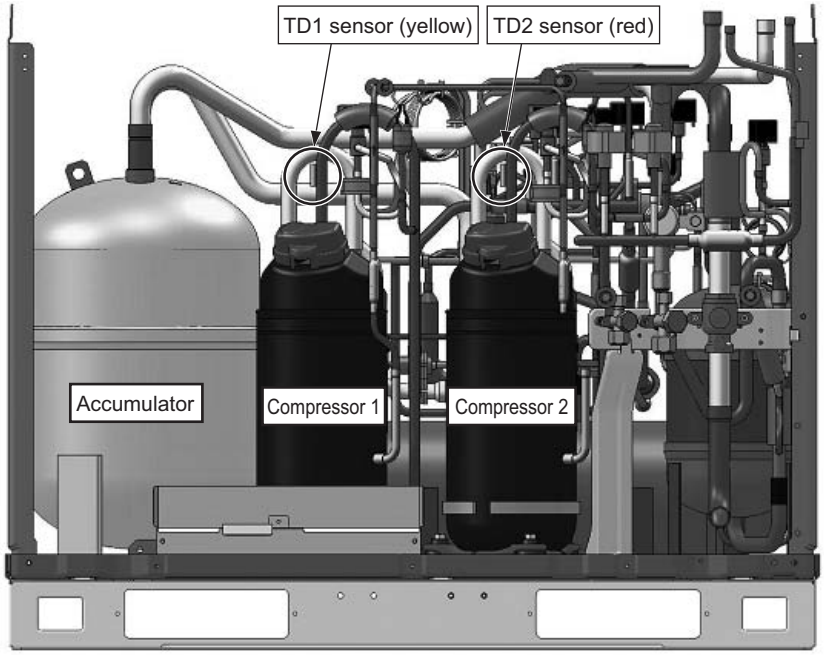 Product Rear View 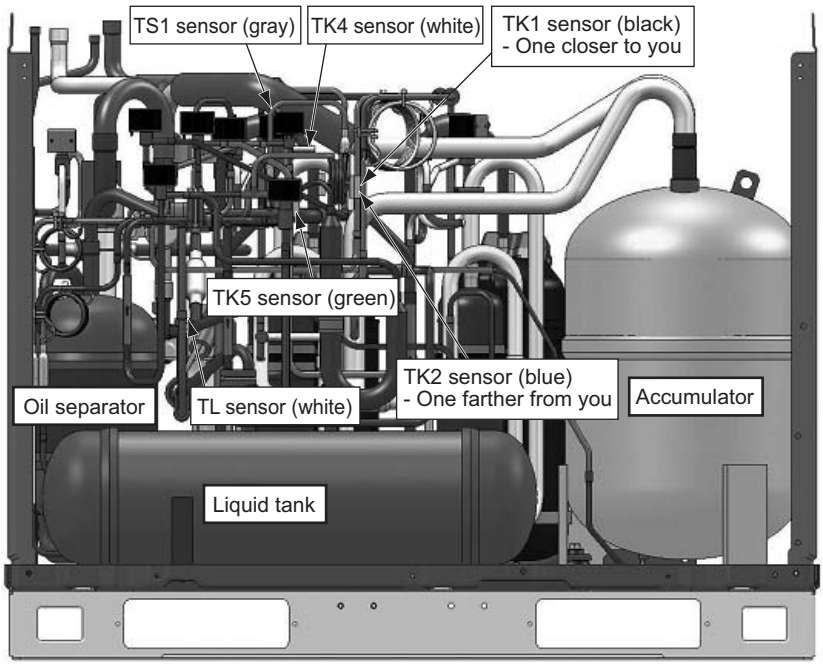 	

No.	Part to be replaced	Work procedure	Remarks
8	Temperature sensors - locations and identification colors (continued) 096 type 114 type	Product Front View 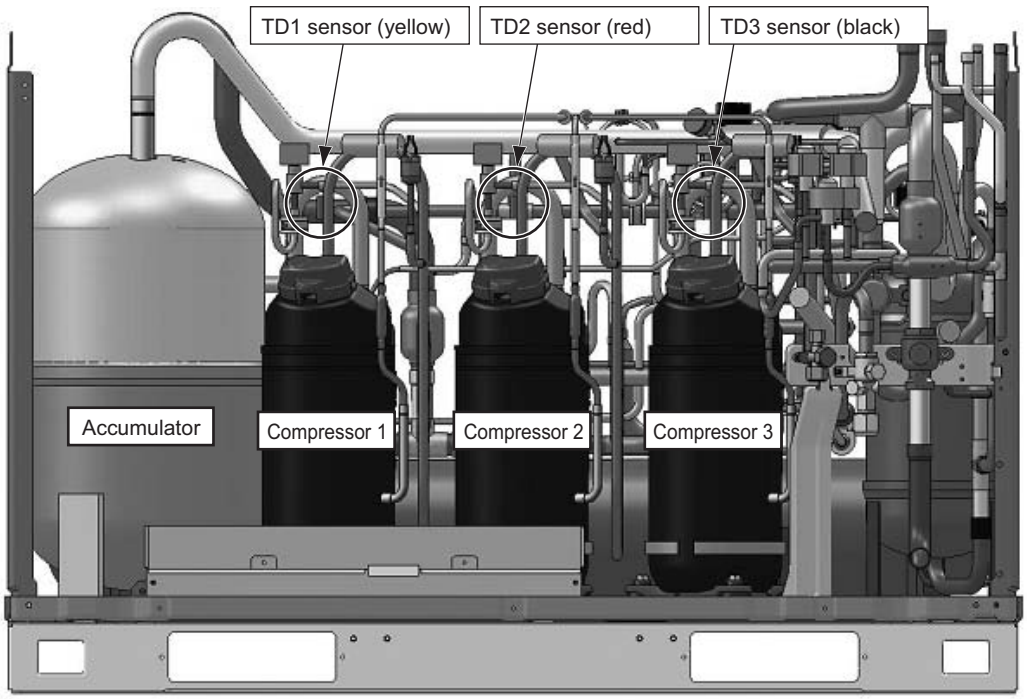 Product Rear View 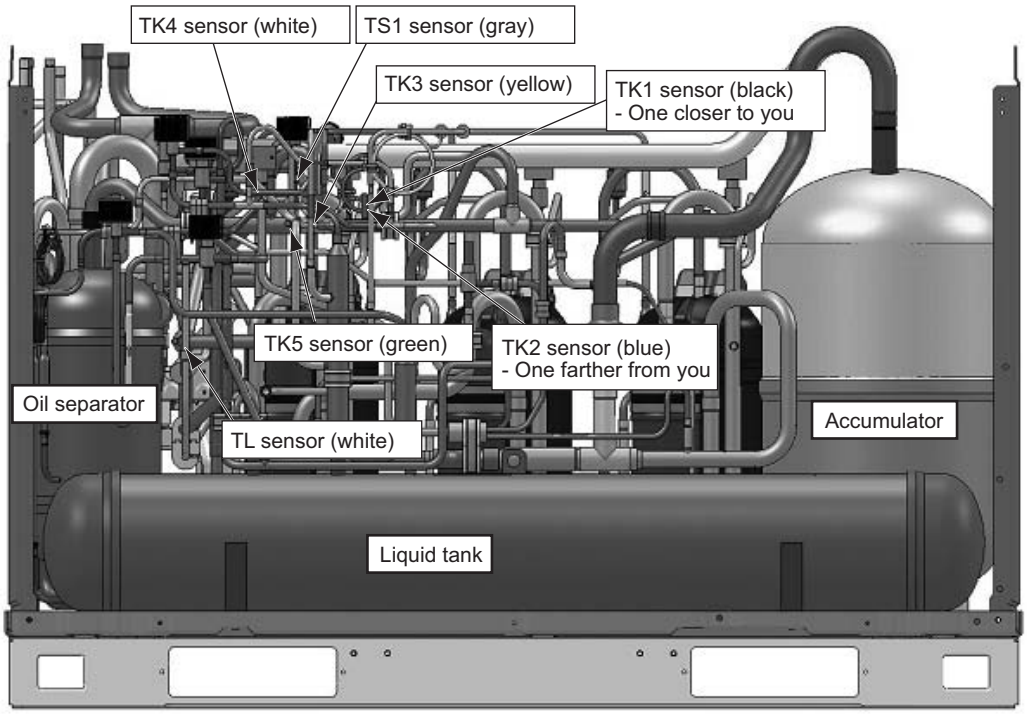 	

No.	Part to be replaced	Work procedure	Remarks
9	Pipe fixing rubber - detachment/ attachment 072 type	This product employs pipe fixing rubber (eyeglass type), combined with a SUS band, to restrain pipes subject to vibration to improve reliability. <Use of SUS band - total 5 locations> 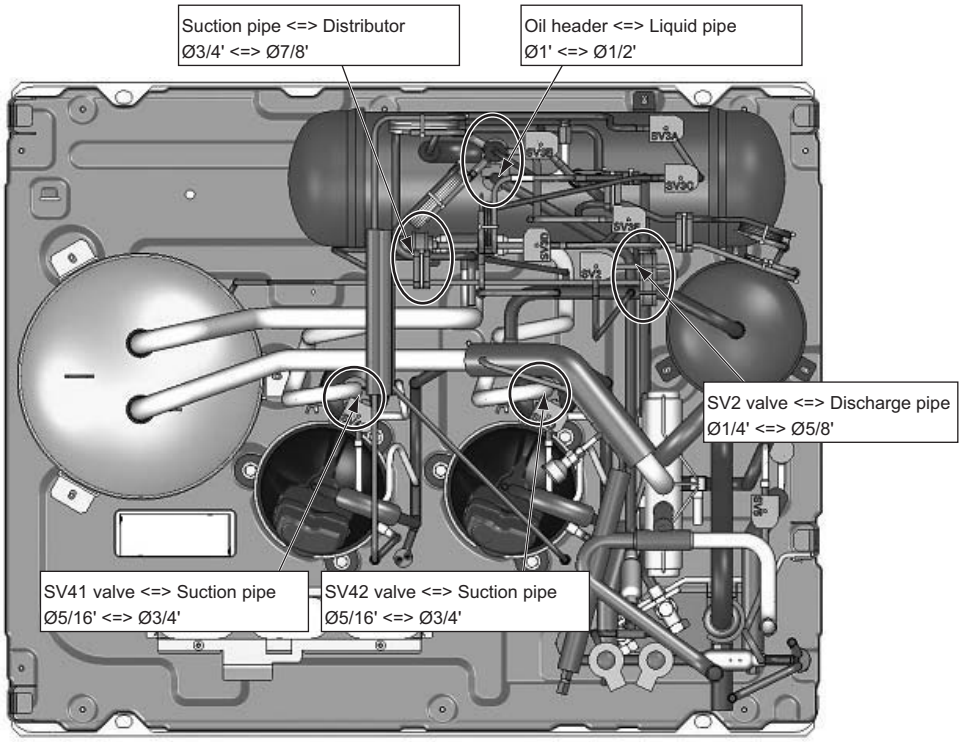 	
	096 type 114 type	This product employs pipe fixing rubber (eyeglass type), combined with a SUS band, to restrain pipes subject to vibration to improve reliability. <Use of SUS band - total 11 locations> 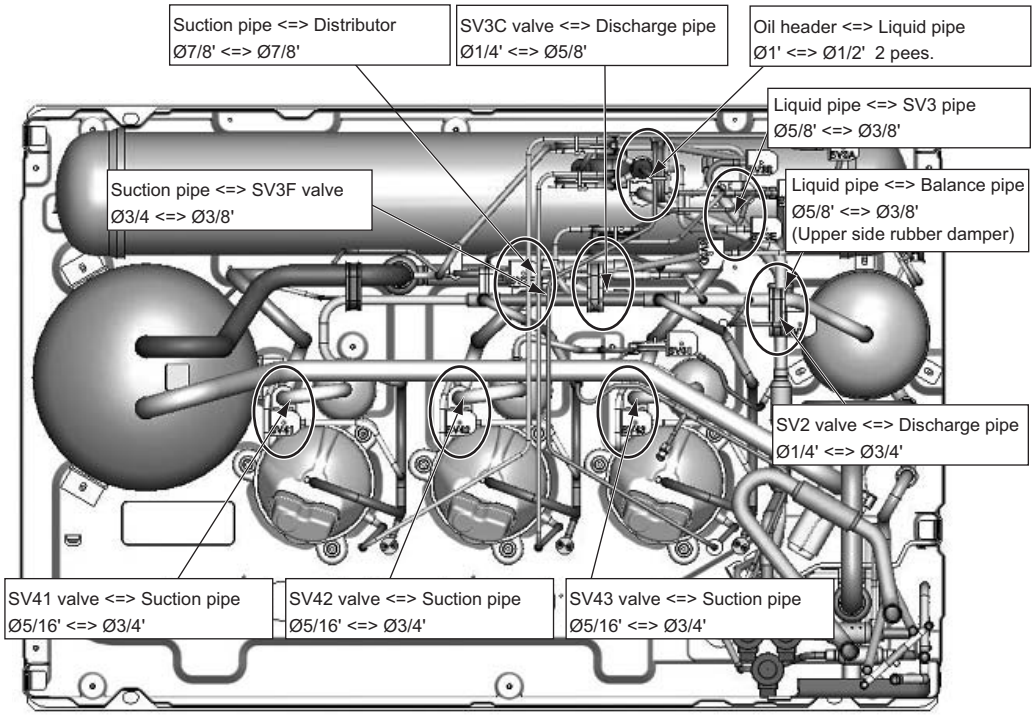 	

No.	Part to be replaced	Work procedure	Remarks
9	Pipe fixing rubber - detachment/ attachment (common)	**⚠ WARNING** **Wear a pair of gloves.** **Otherwise, you will risk an injury involving a replacement part or some other object.** **1. Detachment** 1) Hold the pipe fixing rubber in such a manner that your fingers and thumb are in contact with the two longitudinal ends of the piece, and squeeze it a little to create a small gap between the rubber and the SUS band wrapped around it. 2) Push the hook end of the SUS band down to disengage the hook from the square hole. **2. Attachment** 1) The pipe fixing rubbers use a two-segment design to accommodate a wide range of pipe combinations. When installing them, therefore, it is recommended to first split them up into segments and pair the segments up only after placing them on pipes of matching sizes separately. In this regard, make sure that the mating tooth and slit of pairing segments face each other. 2) When placing an SUS band around pipe fixing rubber, make sure that the hook end of the SUS band coincides with the slit side of the rubber. (The band can be placed the other way around, but only at the expense of work efficiency.) 3) Place the SUS band tightly around the pipe fixing rubber so that there is no gap between them. Take utmost care not to create a gap over the curved section of the rubber where the hairpin side of the band is located. 4) While holding the rubber, press down the base of the hook lightly against the rubber, and engage the hook with the square hole by squeezing the curved section of the rubber where the square hole side of the band is located (see the arrow). (If the hook does not engage with the square hole, recheck whether there is a gap between the band and rubber.)	1) 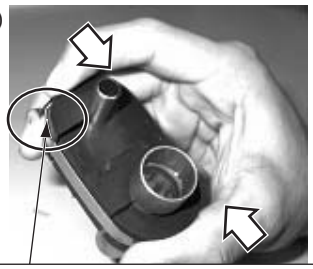 Squeeze rubber to create small gap. 2) Push band down in arrow direction. Place two segments of damper on pipes of matching sizes separately, making sure tooth and slit of pairing segments face each other. 1) Align tooth and slit and push two segments towards each other. 2) 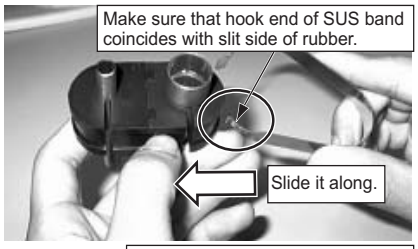 Make sure that hook end of SUS band coincides with slit side of rubber. Slide it along. 3) 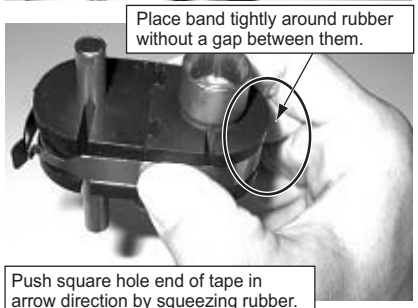 Place band tightly around rubber without a gap between them. Push square hole end of tape in arrow direction by squeezing rubber. 4) 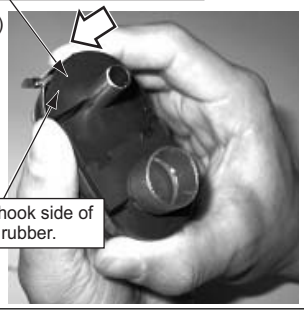 Press down hook side of tape against rubber.

No.	Part to be replaced	Work procedure	Remarks
10	4-way valve - detachment/ attachment 072 type	**⚠ WARNING** **Wear a pair of gloves.** **Otherwise, you will risk an injury involving a replacement part or some other object.** Before starting the work, be sure to recover the refrigerant of outdoor unit by removing it with a refrigerant recovery device. **1. Detachment** 1) Remove the lower cabinet (front side). 2) Remove the inverter box in accordance with the dismantling instructions. 3) Disconnect the 4-way valve coil and PMV coils (2 pieces) and get all wiring located near the 4-way valve out of the way. 4) Remove brazed points (2 locations) for the PMV assembly, which is placed in front of the 4-way valve. * Provide adequate cover for the PMV to protect it from overheating. 5) Since it is difficult to simultaneously remove the brazed points for the pipes located above the 4-way valve (3 pieces), cut through them just below the brazed points using a saw, etc. 6) Detach the pipe located below the 4-way valve. 7) Remove the end sections of the pipes above the 4-way valve, which were cut in step 5). 8) Install a new 4-way valve. * Provide adequate cover for the 4-way valve to protect it from overheating. During the installation, insert pipes firmly into the 4-way valve, or a blockage or leakage involving brazing filler metal may result. 9) Reinstall the PMV assembly, which was removed in step 4). * Provide adequate cover for the PMV to protect it from overheating. 10) Reinstall all the coils removed in step 3), and put the wiring back to its initial state. 11) Reinstall the inverter box in accordance with the installation instructions. 12) Reinstall the lower cabinet.	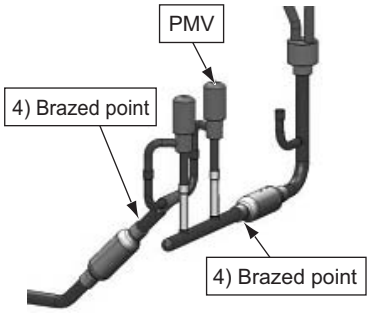 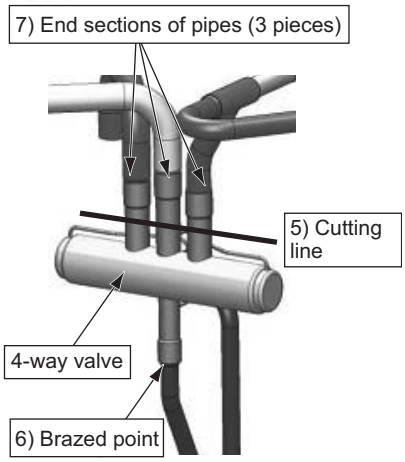

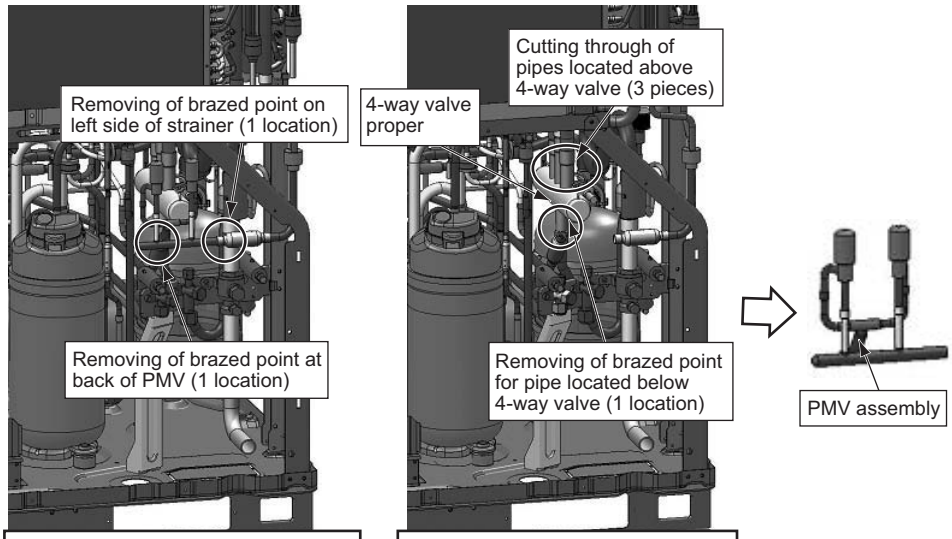

No.	Part to be replaced	Work procedure	Remarks
10	4-way valve - detachment/ attachment (continued) 096 type 114 type	**⚠ WARNING** **Wear a pair of gloves.** **Otherwise, you will risk an injury involving a replacement part or some other object.** Before starting the work, be sure to recover the refrigerant of outdoor unit by removing it with a refrigerant recovery device. **1. Detachment** 1) Remove the lower cabinet (front side). 2) Remove the inverter box in accordance with the dismantling instructions. 3) Disconnect the 4-way valve coil and PMV coils (3 pieces) and get all wiring located near the 4-way valve out of the way. 4) Remove brazed points (3 locations) for the PMV assembly, which is placed in front of the 4-way valve. * Provide adequate cover for the PMV proper to protect it from overheating. 5) Since it is difficult to simultaneously remove the brazed points for the pipes located above the 4-way valve (3 pieces), cut through them just below the brazed points using a saw, etc. 6) Detach the pipe located below the 4-way valve. 7) Remove the end sections of the pipes above the 4-way valve, which were cut in step 5). 8) Install a new 4-way valve. * Provide adequate cover for the 4-way valve to protect it from overheating. During the installation, insert pipes firmly into the 4-way valve, or a blockage or leakage involving brazing filler metal may result. 9) Reinstall the PMV assembly, which was removed in step 4). * Provide adequate cover for the PMV to protect it from overheating. 10) Reinstall all the coils removed in step 3), and put the wiring back to its initial state. 11) Reinstall the inverter box in accordance with the installation instructions. 12) Reinstall the lower cabinet.	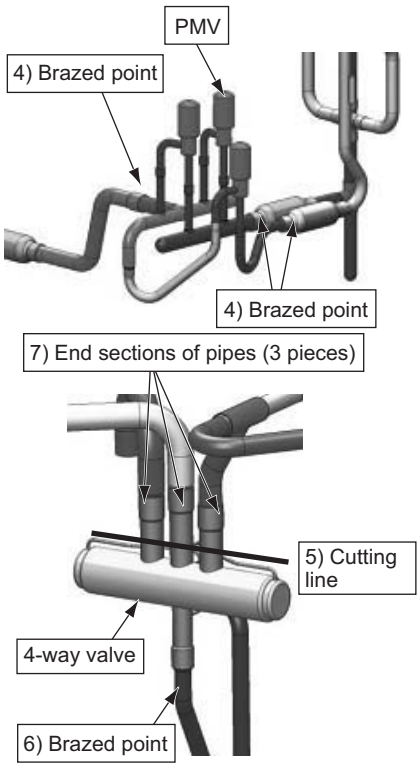

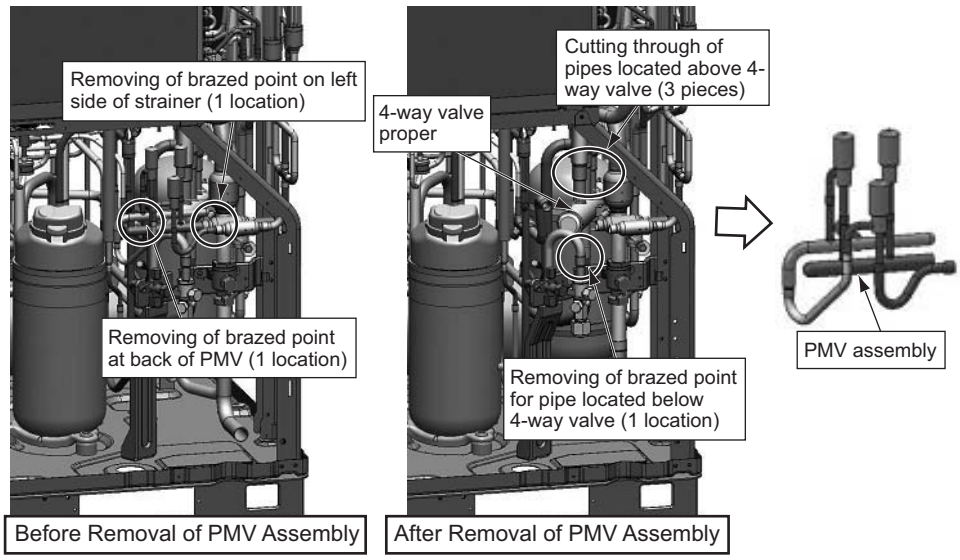

14 P.C. Board Exchange Procedures

14-1. Replacement of outdoor P.C.board

14-1-1. List of service P.C. boards

Part code	Description	Applicable model	P.C. board type code	Product code
431 6V 450	Interface P.C. board	MMY-MAP0724HT9UL MMY-MAP0964HT9UL MMY-MAP1144HT9UL	MCC-1606	ASM-PCB (I/F)
431 6V 451	Inverter P.C. board for Compressor		MCC-1595	ASM-PCB (A3IPDU)
431 6V 452	Inverter P.C. board for fan		MCC-1610	ASM-PCB (FANIPDU)
431 6V 453	Noise filter P.C. board		MCC-1608-A,B	ASM-PCB (N/F)

14-1-2. Configuration of inverter assembly

MMY-MAP0724HT9UL

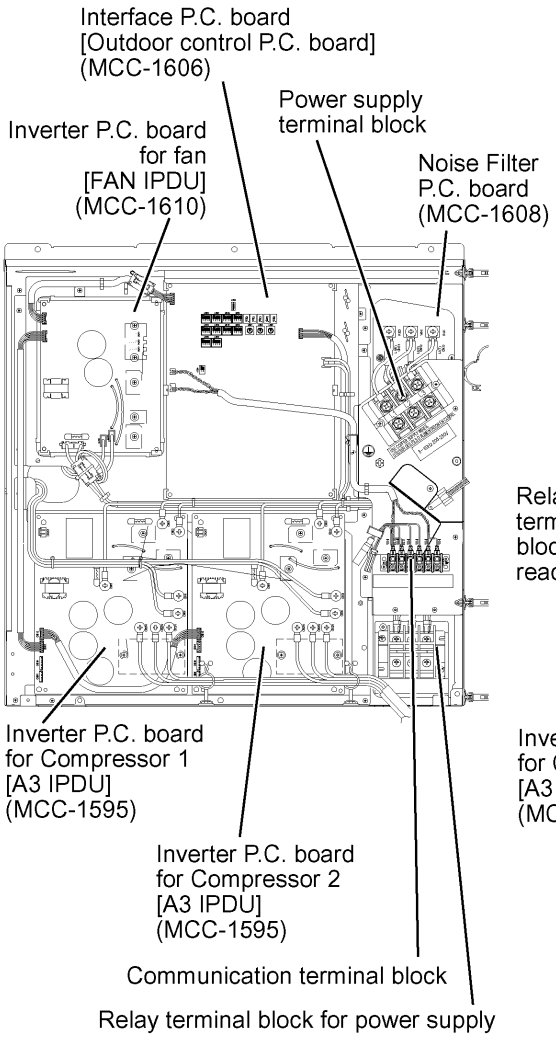

MMY-MAP0964HT9UL
MMY-MAP1144HT9UL

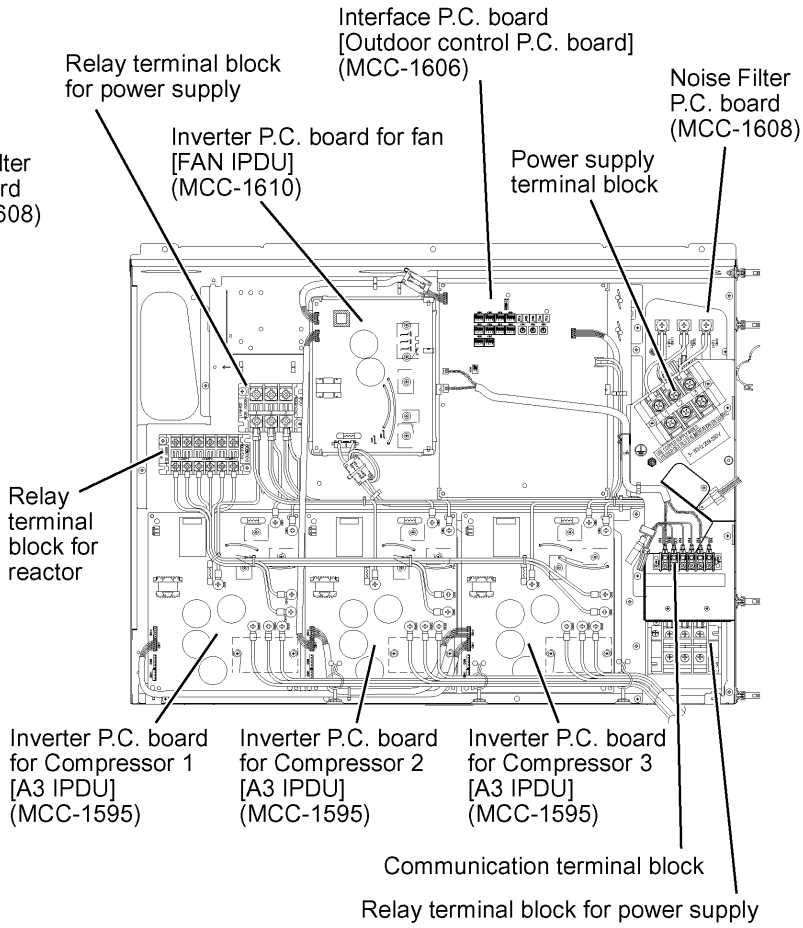

14-1-3. Interface board replacement procedure

Parts code	Description	Applicable model	P.C. board type code	Product code
431 6V 450	Interface P.C. Board	MMY-MAP0724HT9UL MMY-MAP0964HT9UL MMY-MAP1144HT9UL	MCC-1606	ASM-PCB (I/F)

This Interface board is commonly installed in different models before shipment. When the board assembly is to be replaced, check the displayed inspection contents below and replace the board in accordance with the model, following the below procedure.

Replacement steps:

(1) Turn off the power supply of the outdoor unit.

(2) Remove all of the connectors and fast-on terminals connected to the interface board. (Remove the connectors and fast-on terminals by pulling the connector body. Do not pull the wire).

(3) Remove the interface board from the six PCB mounts (***1***).

(4) Cut the jumper wires of the service board, as instructed in the table below.
The jumper setting differs from original supplied PCB, therefore be sure to configure the Jumpers as in the table below.
If the model is not specified, inspection code "L10" is displayed and the equipment will not operate.

Model name	J12	J11	J10	J09	J22	J25
Service P.C. Board	Yes	Yes	Yes	Yes	Yes	Yes
MMY-MAP0724HT9UL	—	—	Cut	—	—	Cut
MMY-MAP1144HT9UL	Cut	Cut	Cut	—	—	Cut
MMY-MAP0964HT9UL	Cut	Cut	Cut	Cut	—	Cut

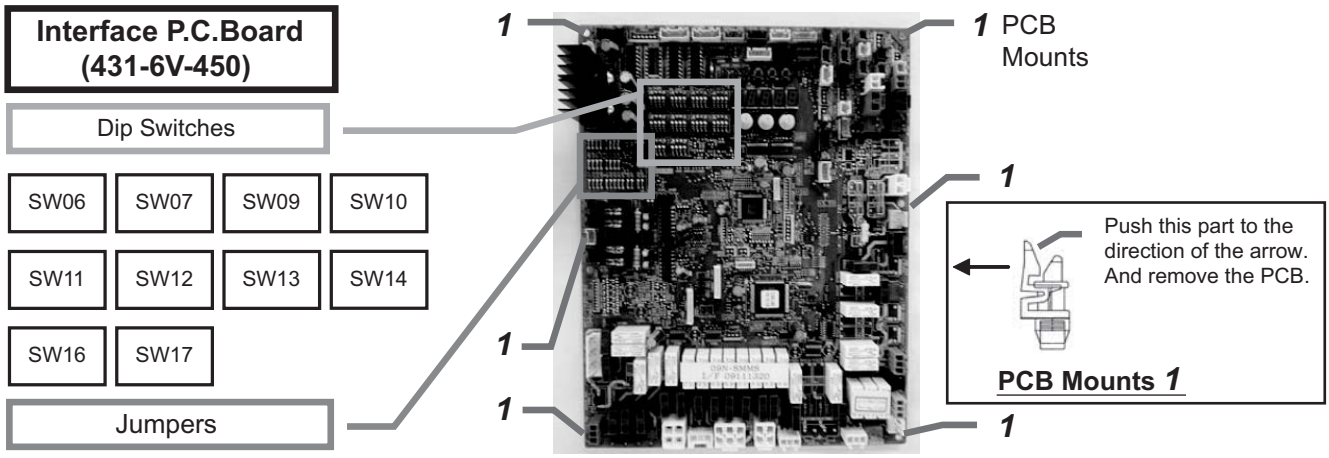

(5) Set the dip switch settings of the service board to match the switch settings of the PCB being replaced.

(6) Install the service board to the outdoor control unit (Confirm that it is securely fixed to the PCB Mounts).

(7) Connect the connectors and fast-on terminals (Confirm that they are correctly and securely inserted).

(8) If a component on the board is bent during board replacement, adjust it manually ensuring that it is not short or contact other parts.

(9) Install the cover, then turn on the power supply. Check the operation.

14-1-4. Compressor IPDU replacement procedure

Parts code	Description	Applicable model	P.C. board type code	Product code
431 6V 451	Inverter P.C. board for Compressor	MMY-MAP0724HT9UL MMY-MAP0964HT9UL MMY-MAP1144HT9UL	MCC-1595	ASM-PCB (A3IPDU)

This board is commonly installed in different models before shipment. Set the dip switch (SW800) setting of the service board to the switch setting before replacement.

Replacement Steps:

(1) Turn off the power supply of the outdoor unit and allow at least 1 minute for the capacitor to discharge. Confirm that the light of the LED (D800) fades away.

(2) Remove all the connectors and 8 screws of the terminals (***1***) connected to the Compressor IPDU. (Remove the connectors by pulling the connector body. Do not pull the wire. Screws are to be re-used after procedure).

(3) Remove all the 5 screws (***2***) which secures the Compressor IPDU to the Heat sink.
(These screws are to be re-used after procedure.)

(4) Remove the Compressor IPDU from the four spacers (***3***) by pinching the top of the spacers by round-nose pliers.

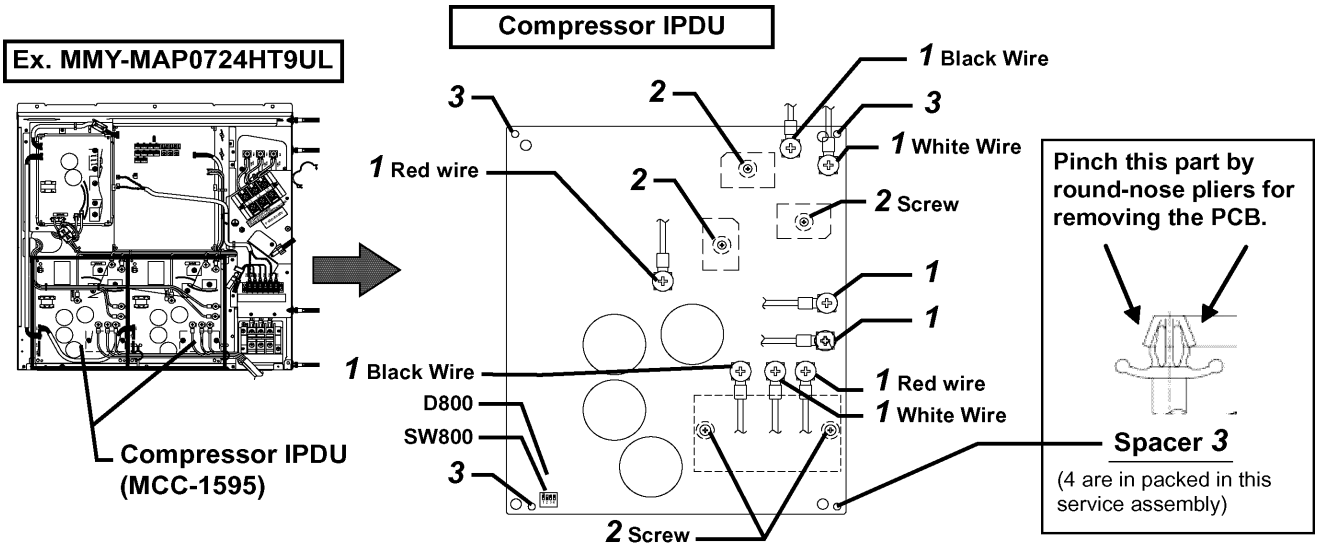

(5) Confirm that no dirt or damage is on the insulation sheet (flesh color) on the heat sink. As it can reduce the heat transfer efficiency, and can cause a breakdown. If the insulation sheet comes off the heat sink, re-apply the insulation sheet as shown in the following figure.

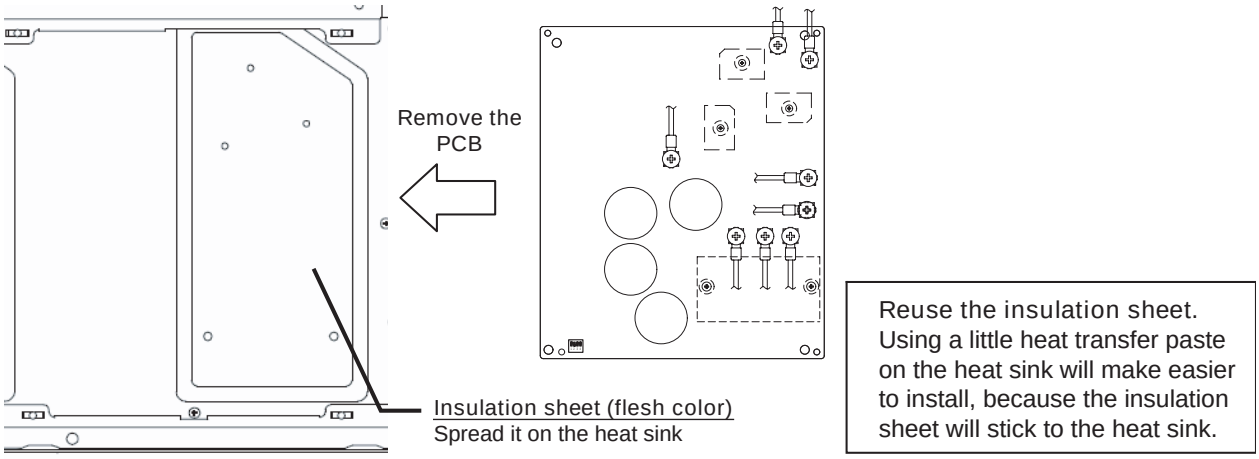

(6) Set the dip switch (SW800) setting of the service board to match the switch setting from the original PCB.
- Set the dip switch (SW800) depending on the position of the IPDU within the electrical box, as shown in the following diagram.

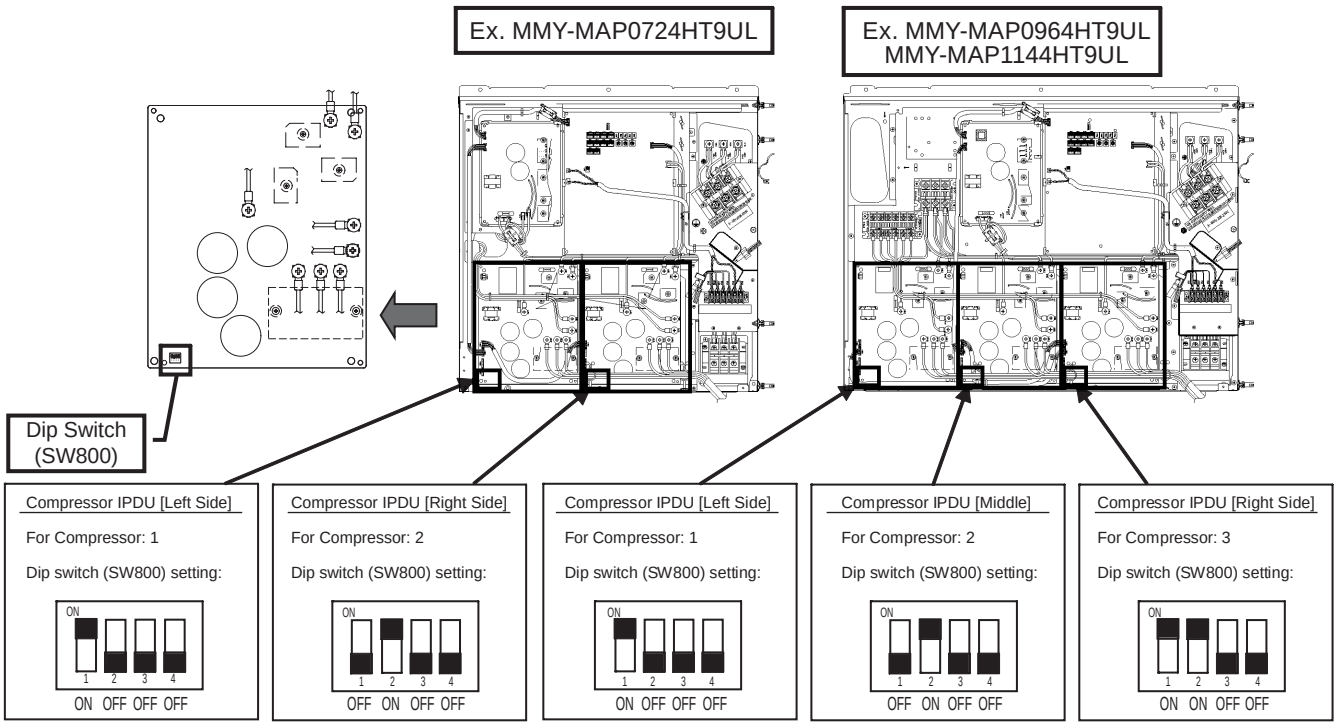

(7) Align the insulation sheet with the screw holes on the insulation sheet and the mounting holes on the PCB with the PCB mounts. And fix the Compressor IPDU to the outdoor control unit by the spacers (3).

(8) Screw the Compressor IPDU to the heat sink by the 5 screws that were removed in step (3). If the screws are loose, the effect component will generate heat, and cause it to breakdown. Do not use an electric driver or an air driver. As it can cause component damage. The torque of the screws for DB01, DB02 and DB03 is “0.55N•m (0.41ft•lbs)” and it for Q201 is “1.2 N•m (0.89 ft•lbs)”.

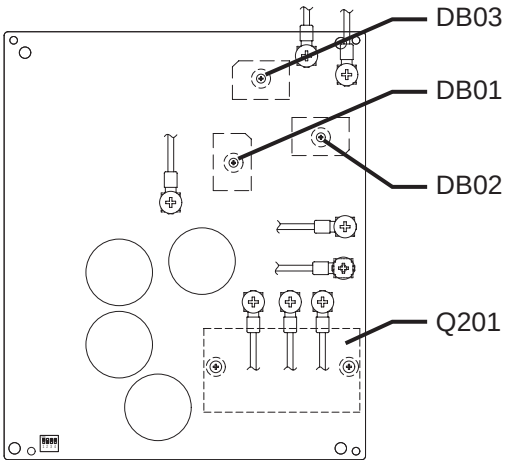

(9) Re-connect the connectors and terminals (1). Be sure that all the connectors and the terminals are connected correctly and securely inserted. If the screws are loose, the effect component will generate heat, and cause it to breakdown. Do not use an electric driver or an air driver. As it can cause component damage. The torque of screws for the terminals is “1.2 N•m (0.89 ft•lbs)”.

(10) If the components on the PCB were bent during this procedure, straighten them so they do not touch other parts.

(11) Install the cover, then turn on the supply. Check the operation.

14-1-5. Fan IPDU P.C. board (MCC-1610) replacement procedure

Parts code	Description	Applicable model	P.C. board type code	Product code
431 6V 452	Inverter P.C. board for fan	MMY-MAP0724HT9UL MMY-MAP0964HT9UL MMY-MAP1144HT9UL	MCC-1610	ASM-PCB (FANIPDU)

Replacement steps:

(1) Turn off the power supply of the outdoor unit and allow at least one minute for the capacitor to discharge. Confirm that the light of the LED (D640) fades away.

(2) Remove all the connectors and the fast-on terminals (***1***) connected to the FAN IPDU. (Remove the connectors and fast-on terminals by pulling the connector body. Do not pull the wire).

(3) Remove all the five screws (***2***) which secures the FAN IPDU to the Heat sink.
(These screws are to be re-used after procedure.)

(4) Remove the Fan IPDU from the three PCB Mounts (***3***).

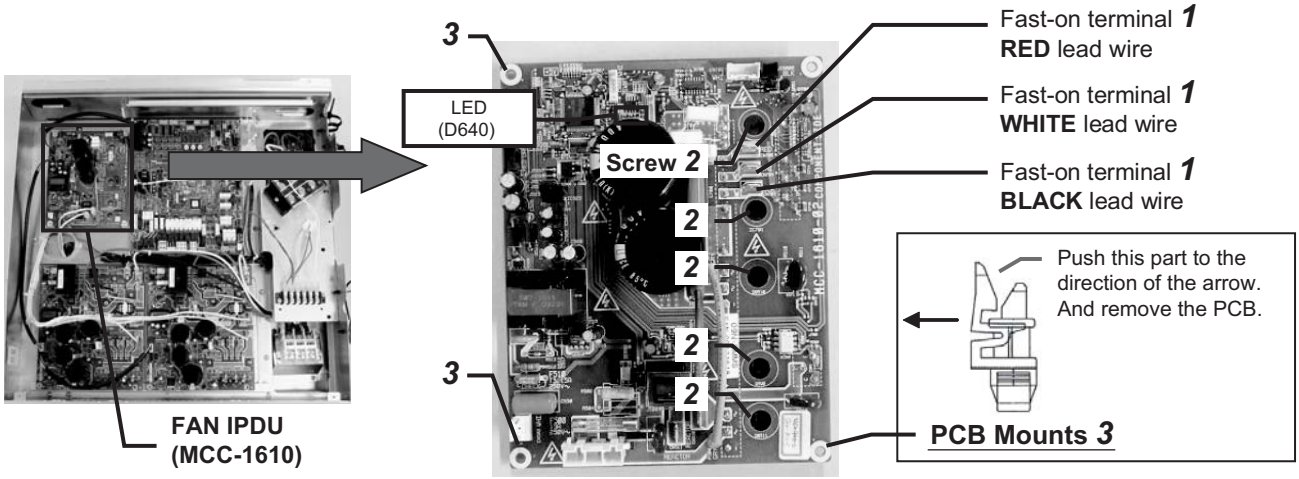

(5) Confirm that no dirt or damage is on the sub heat sink. As it can reduce the heat transfer efficiency, and cause a breakdown.

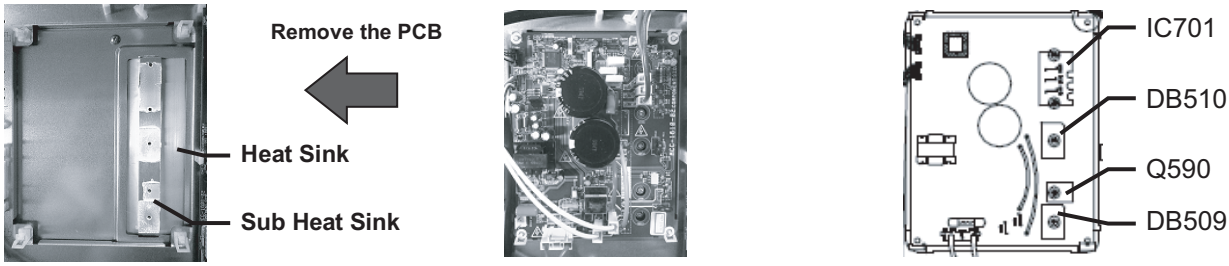

(6) Align the PCB mount holes on the PCB with the PCB mounts, and fix the FAN IPDU to the outdoor control unit by clipping the PCB into the PCB mounts (***3***).

(7) Screw the FAN IPDU to the heat sink by the five screws that were removed in step (3). If the screws are loose, the effected component will generate heat, and cause in to breakdown. Do not use an electric driver or an air driver, as it can cause component damage. The torque of 5 screws (IC701, DB509, DB510 and Q590) is “0.41 ft•lbs (0.55 N•m)”.

(8) Re-connect the connectors and fast-on terminals (***1***). Be sure that all the connectors and the fast-on terminals are connected correctly and securely inserted.

(9) If the components on the PCB were bent during this procedure, straighten them so they do not to touch other parts.

(10) Install the cover, then turn on the supply. Check the operation.

14-1-6. Noise filter P.C. board (MCC-1608 A, B) replacement procedure

Parts code	Description	Applicable model	P.C. board type code	Product code
431 6V 453	Noise filter P.C. board	MMY-MAP0724HT9UL MMY-MAP0964HT9UL MMY-MAP1144HT9UL	MCC-1608-A, B	ASM-PCB (N/F)

<1. Preparation (model selection)>

All P.C. boards of this type leave the factory with default settings that are common to all applicable models. When replacing a P.C. board assembly on site, follow the procedure described below.

<2. Replacement steps>

(1) Turn off the power to the outdoor unit.

(2) Remove the terminal block sub-assembly (***1***).
Remove the screws (***2***) on the power supply terminal block (***4***) and the screws (***3***) securing the terminal block subassembly (***1***).

- The screws will be reused during the installation of the service P.C. board, so keep them in a safe place.

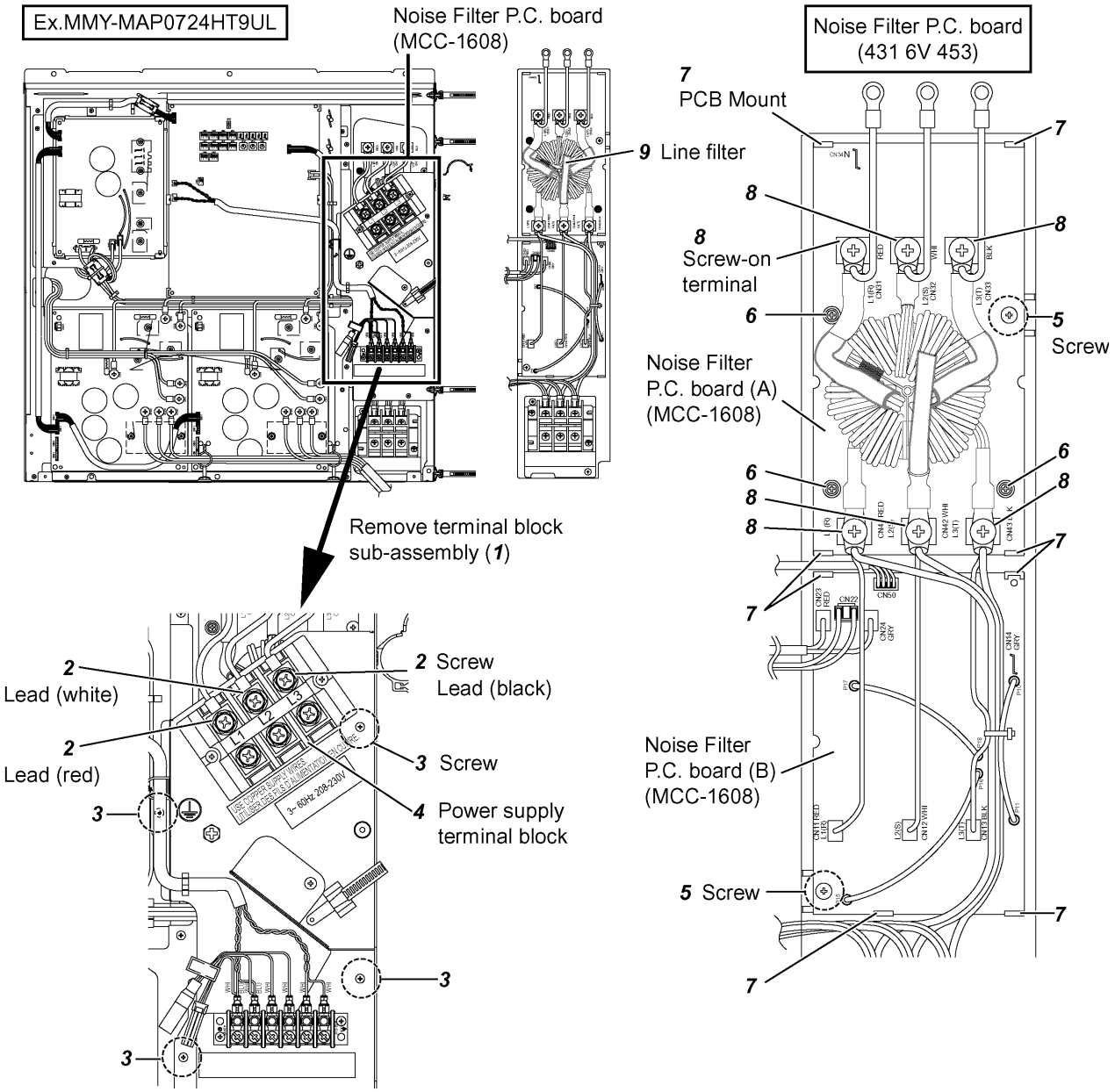

(3) Disconnect all the connectors and fast-on terminals used to connect wiring to the noise filter P.C. board.
- The line filter (9) and its leads, both connected to the screw-on terminals (8) of the noise filter P.C. board (A) will be removed in step 6.
- Disconnect all the connectors and fast-on terminals.

(4) Remove the earthing screws (5), (6).
- The removed earthing screws (5), (6) will be reused during the installation of the service P.C. board, so keep them in a safe place.

(5) Remove the noise filter P.C. board assembly by unlocking the four card edge spacers used to secure the P.C. board (7).

(6) Remove the line filter (9) and its leads, both connected to the screw-on terminals (8) of the just-removed noise filter P.C. board (A), and reinstall them on the service P.C. board (A) by firmly connecting them to the screw-on terminals (8) in the same manner as before.

Line Filter installation:
Screw the line filter and the connecting wires together to the terminals as below.
The torque of 6 screws of the line filter is “1.84 ft•lbs (2.5 N•m)”.
Please check that the screws connecting the line filter are not loose.
If the screw is loose, the screw will generate heats, and cause the line filter to breakdown.
Do not use an electric driver or an air driver, as this can cause damage to the line filter.

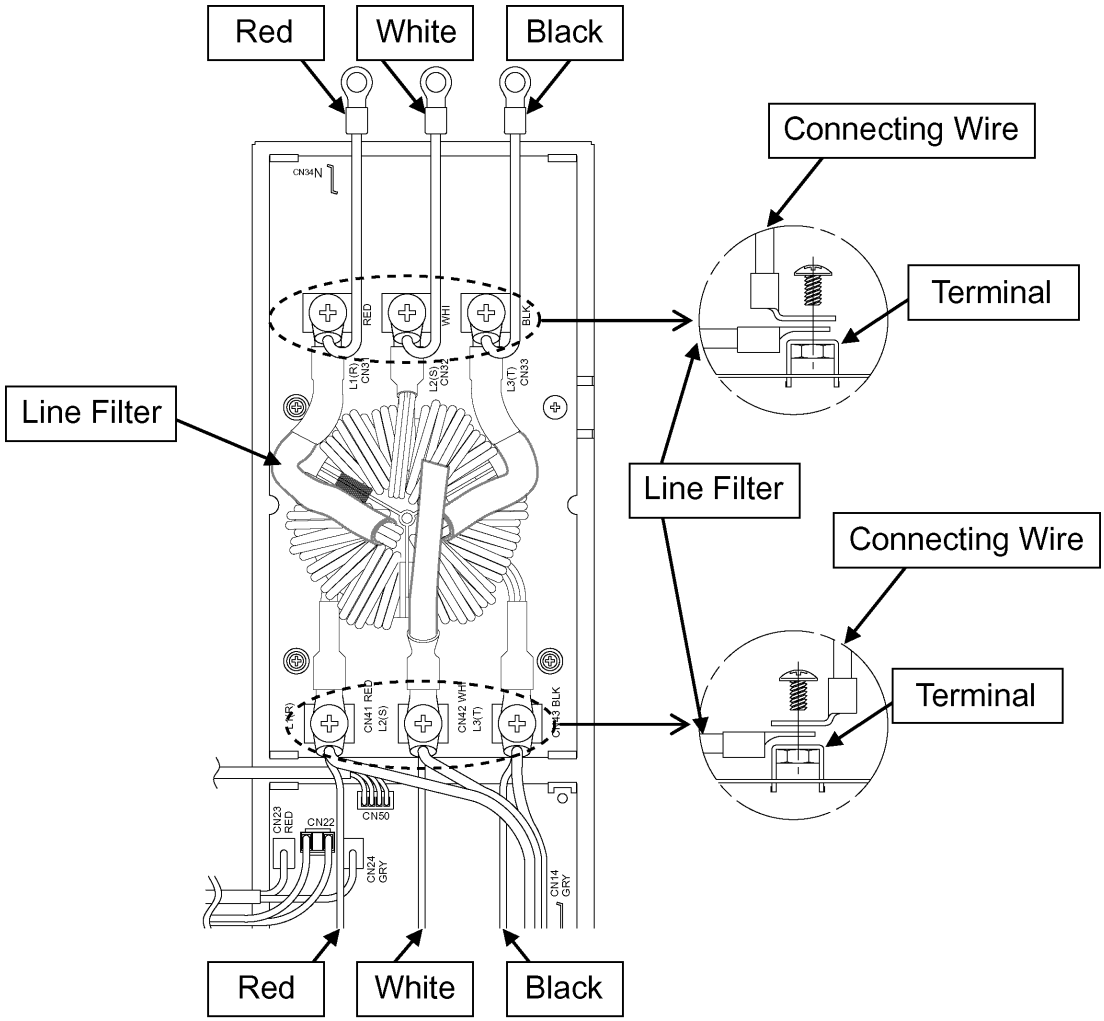

Connect the wires according to the wiring diagram.

(7) Install the service P.C. boards (A) and (B) in the outdoor unit controller.
(Make sure that they are firmly secured to the card edge spacers (***7***).)

(8) Securely connect the service P.C. boards to the chassis using the earthing screws (***5***), (***6***) removed in step 4.
If either of the screws is loose, it will pose a risk of device failure by degrading noise control, so take care while engaging in the work.
Nevertheless, do not use an electric or pneumatic screwdriver under any circumstances as it may lead to component damage.

(9) Connect the wiring using the connectors and fast-on terminals removed in step 3.
Make sure that the connectors and fast-on terminals are connected correctly and securely.

(10) If any component on the P.C. board becomes crooked during replacement, straighten it without touching any other component.

(11) Mount the terminal block sub-assembly (***1***) and firmly secure it using the screws (***3***).

(12) Securely connect the red, white and black leads from the service P.C. board (A) to the power supply terminal block (***4***) using the screws (***2***).

(13) Put the cover on, turn on the power, and check operation.

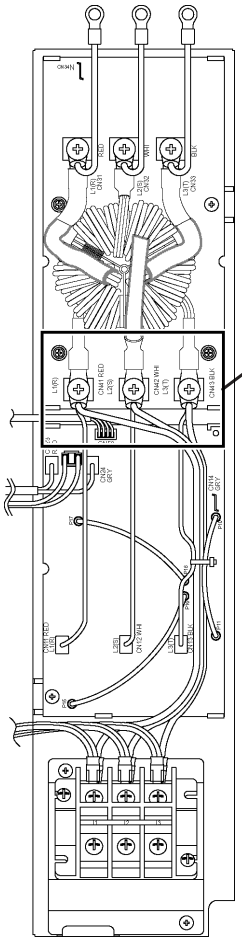

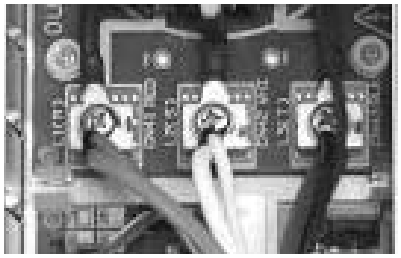

Close-up view of screw-on terminals (***8***)

Screw tightening torque (ft•lbs)

Screw diameter	Torque (ft•lbs)
M6	1.84
M4	0.89
M3	0.37

15 Exploded Diagram / Parts Price List

SMMS-i OUTDOOR UNIT
MMY-MAP0724HT9UL

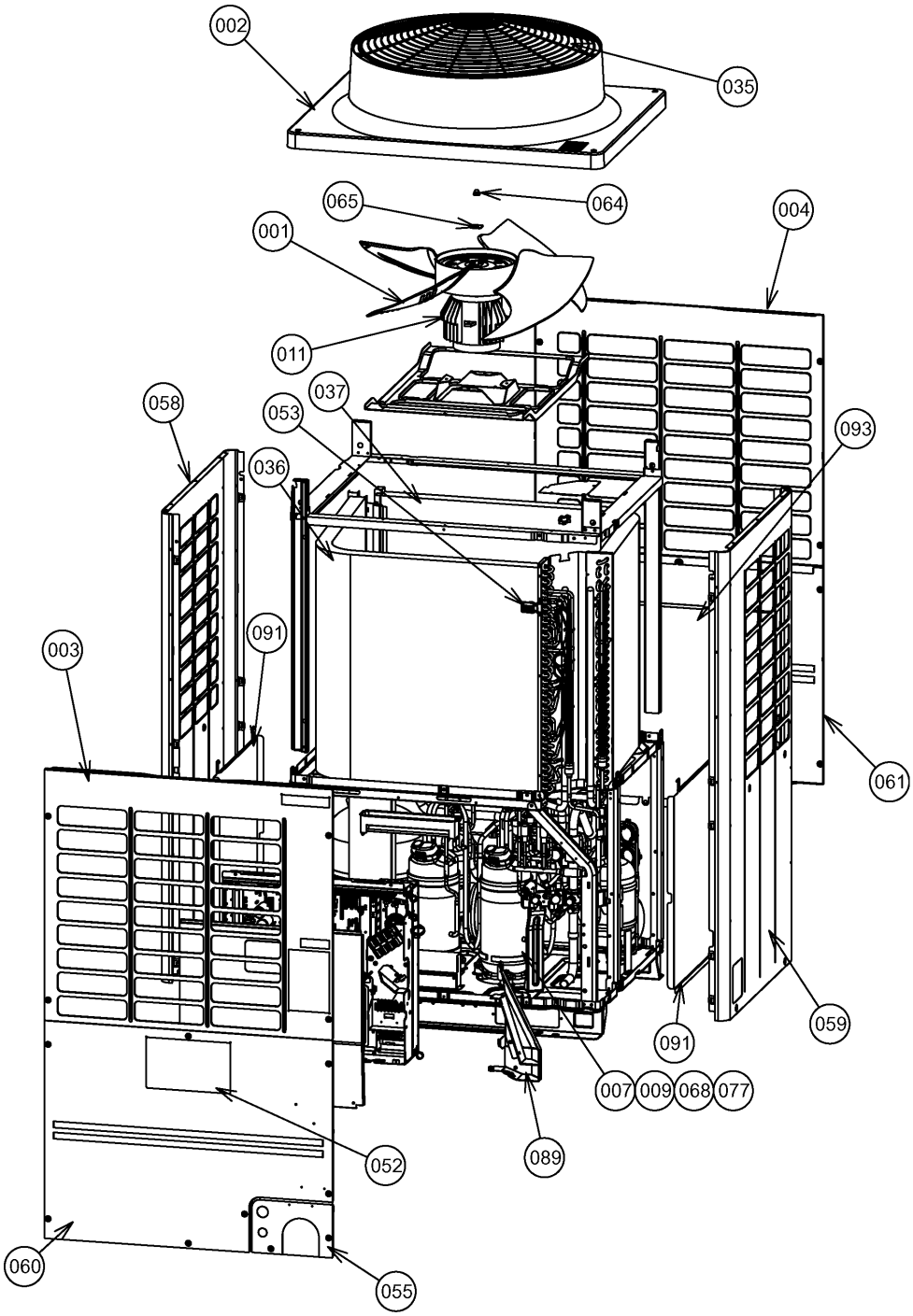

MMY-MAP0724HT9UL

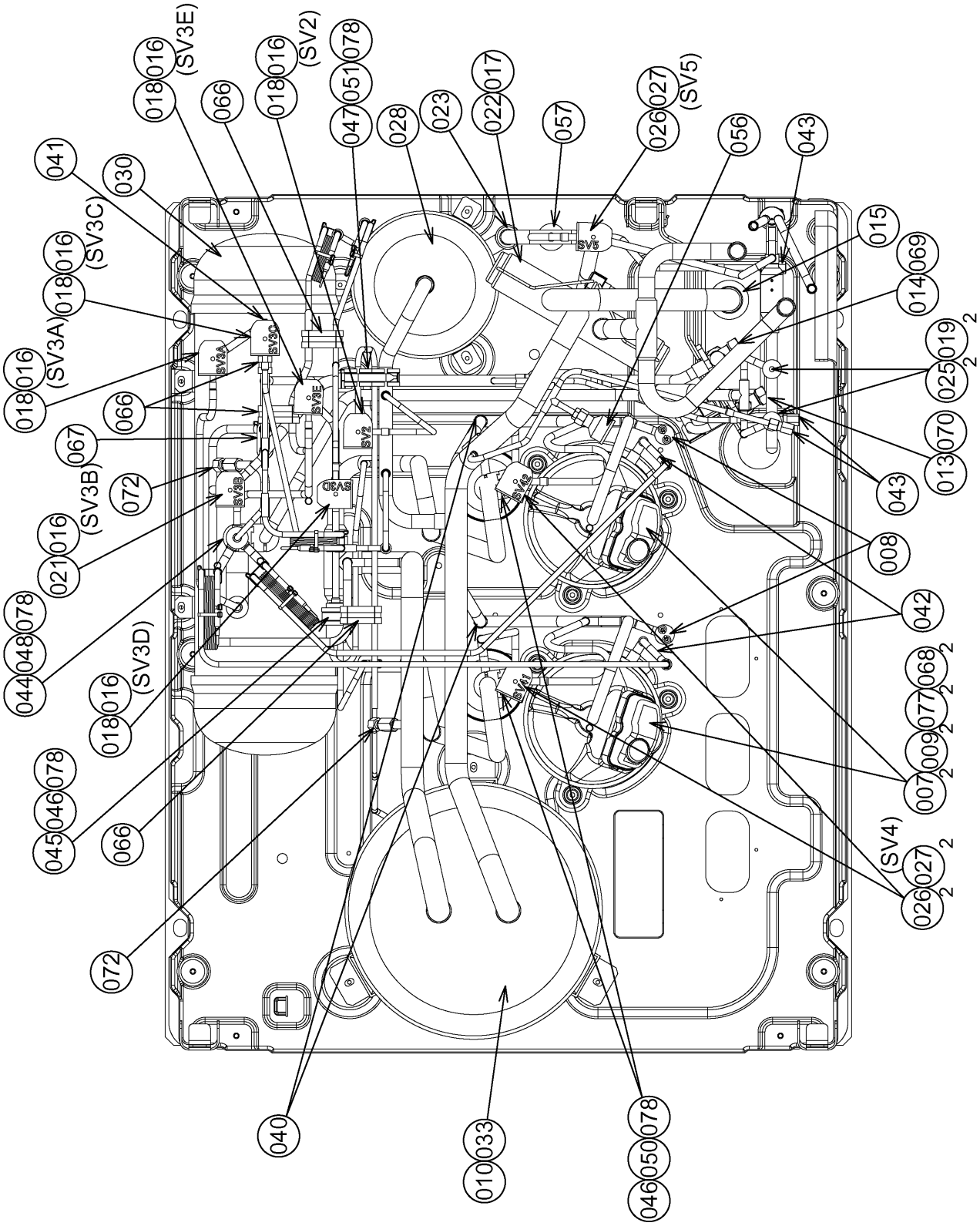

REFRIGERATION CIRCUIT DIAGRAM (MMY-MAP0724HT9UL)

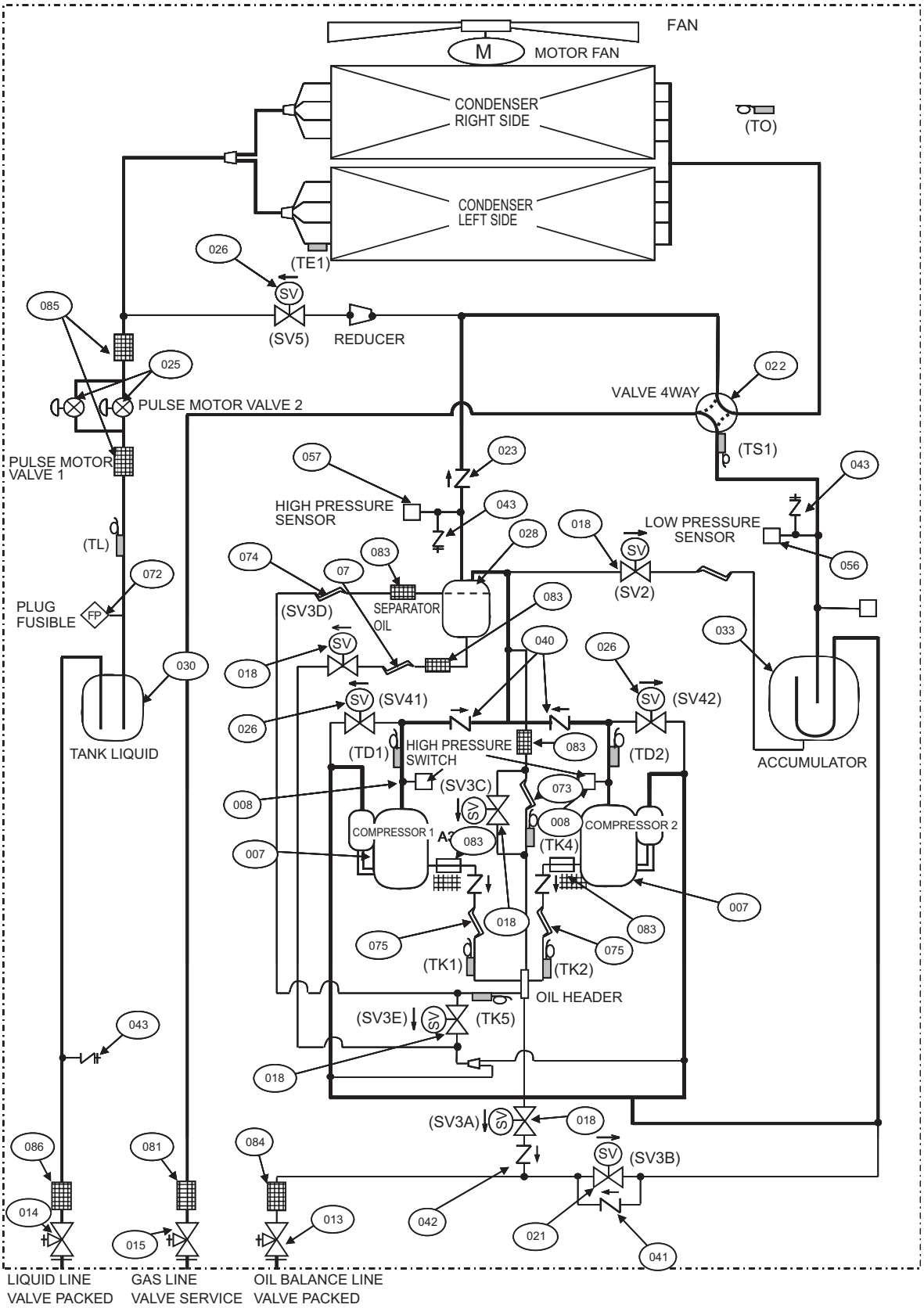

Symbol							
	VALVE 2WAY	CAPILLARY TUBE	VALVE CHECKED	JOINT CHECK	STRAINER	SENSOR TEMPERATURE	DISTRIBUTOR

SMMS-i OUTDOOR UNIT
MMY-MAP0964HT9UL, MMY-MAP114HT9UL

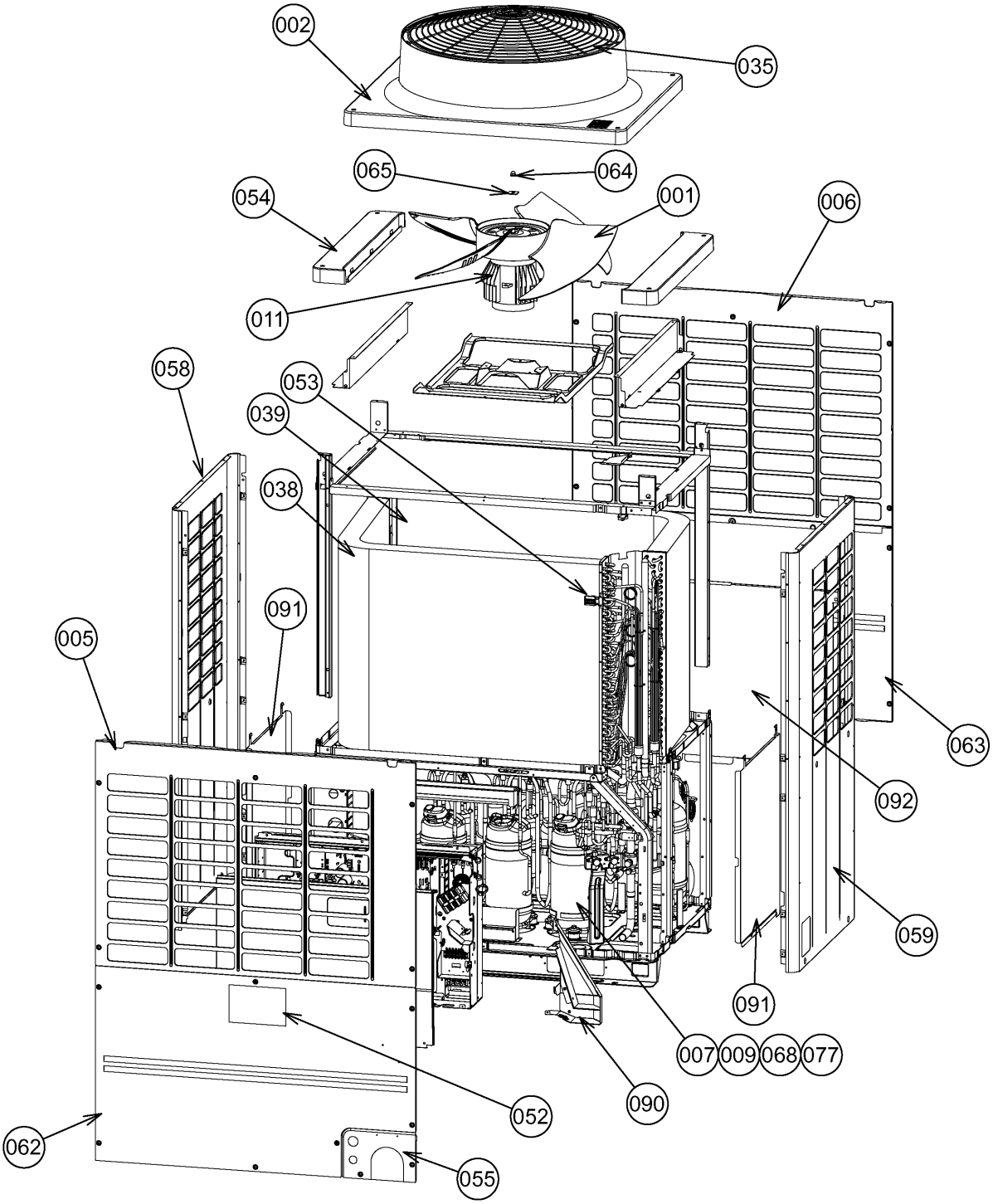

MMY-MAP0964HT9UL, MMY-MAP1144HT9UL

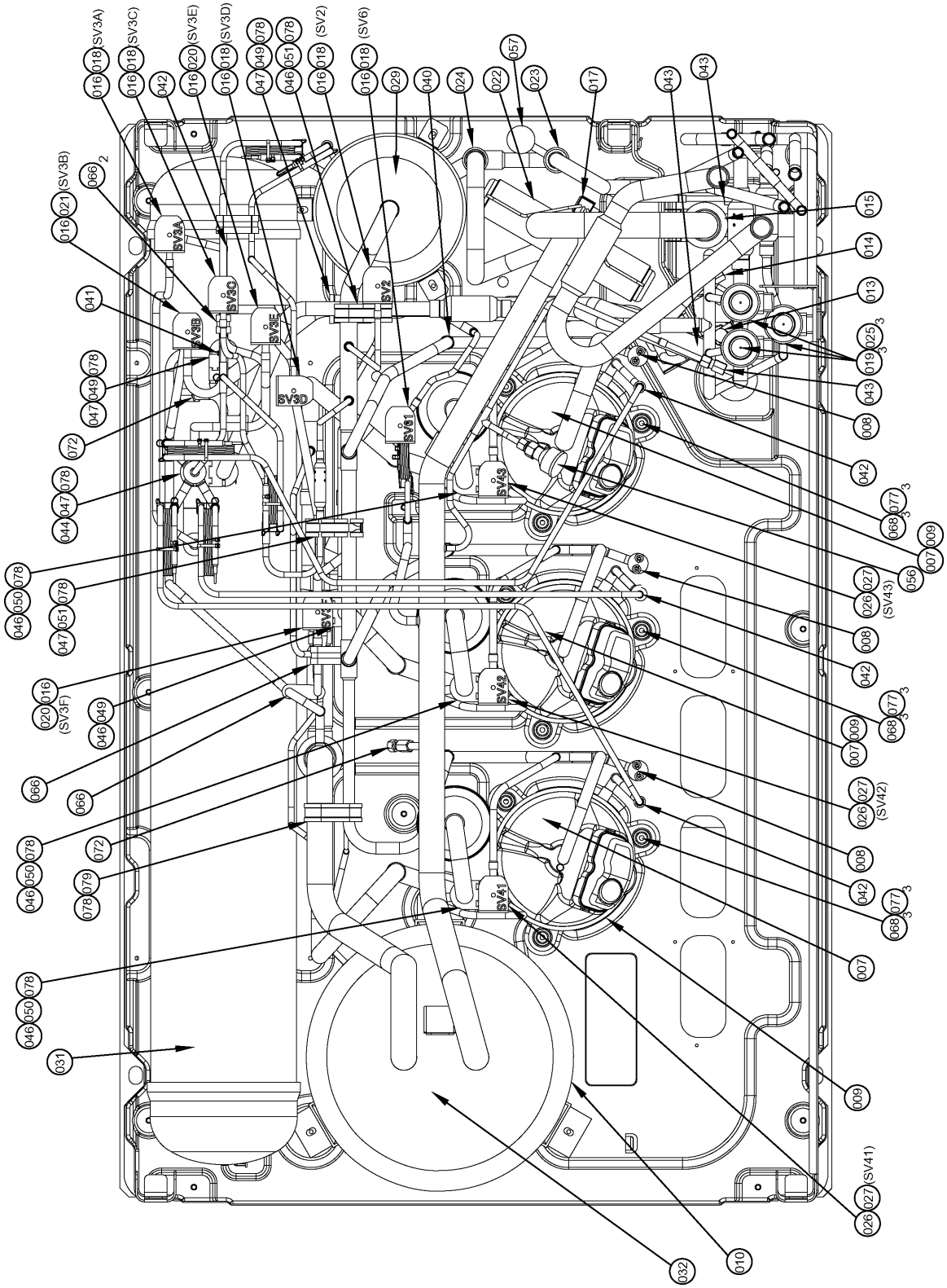

REFRIGERATION CIRCUIT DIAGRAM (MMY-MAP0964HT9UL, MMY-MAP1144HT9UL)

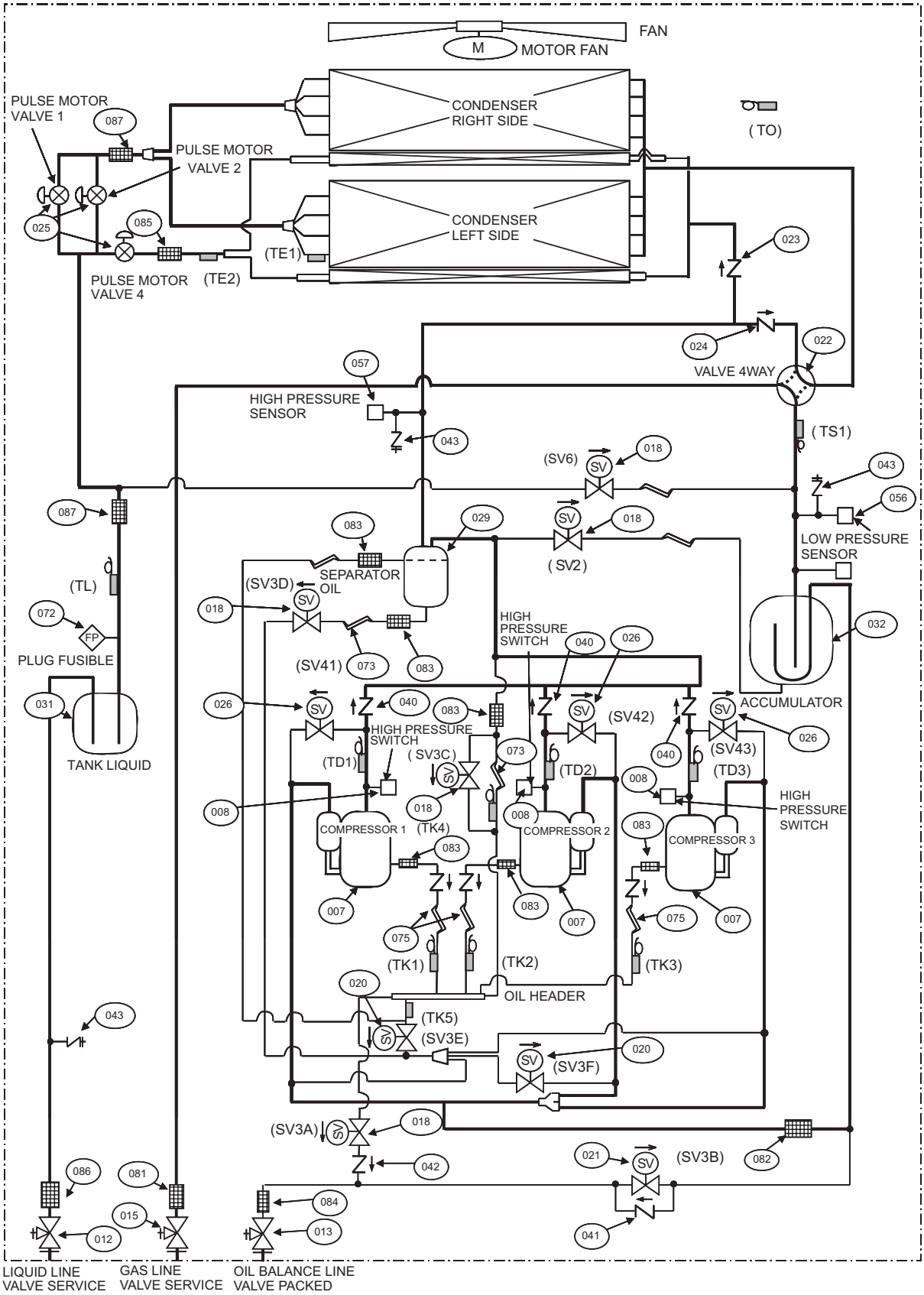

Symbol							
	VALVE 2WAY	CAPILLARY TUBE	VALVE CHECKED	JOINT CHECK	STRAINER	SENSOR TEMPERATURE	DISTRIBUTOR

Ref. No.	Part No.	Description	MMY-MAP		
			0724HT9UL	0964HT9UL	1144HT9UL
001	43120252	FAN, PROPELLER	1	1	1
002	43100471	CABINET, AIR OUTLET	1	1	1
003	43100472	CABINET, AIR INLET, FRONT	1		
004	43100473	CABINET, AIR INLET, BACK	1		
005	43100474	CABINET, AIR INLET, FRONT		1	1
006	43100475	CABINET, AIR INLET, BACK		1	1
007	43141517	COMPRESSOR, DA421A3FB-28M	2	3	3
008	43151308	SWITCH, PRESSURE ACB-4UB105W	2	3	3
009	43157276	HEATER, CASE, 29W 240V	2	3	3
010	43157290	HEATER, CASE, 55W 240V	1	1	1
011	4312C071	MOTOR, FAN, DC280V	1	1	1
013	43146741	VALVE, PACKED, 9.52	1	1	1
014	43046498	VALVE, PACKED, 12.7	1	1	1
015	4314N041	VALVE, BALL, 25.4	1	1	1
016	4314N046	COIL, S0LEN0ID, AC208-230 60HZ	6	8	8
017	43146739	COIL, STF-01AQ503UC1	1	1	1
018	43146711	VALVE, 2WAY	5	5	5
019	4314N028	COIL, PMV	2	3	3
020	43146712	VALVE, 2WAY		2	2
021	43146730	VALVE , 2WAY	1	1	1
022	4314N049	VALVE, 4WAY	1	1	1
023	43146734	VALVE, CHECK	1	1	1
024	43146742	VALVE, CHECK		1	1
025	4314N050	VALVE, PMV	2	3	3
026	4314N044	VALVE, 2WAY	3	3	3
027	4314N048	COIL, SOLENOID, AC208-230, 60HZ	3	3	3
028	43148241	SEPARATOR	1		
029	43148249	SEPARATOR		1	1
030	43148247	TANK, LIQUID	1		
031	43148248	TANK, LIQUID		1	1
032	43148245	ACCUMULATOR		1	1
033	43148246	ACCUMULATOR	1		
035	43119519	GUARD, FAN	1	1	1
036	4314G295	CONDENSER ASSY, TWO ROW, LEFT	1		
037	4314G296	CONDENSER ASSY, TWO ROW, RIGHT	1		
038	4314G297	CONDENSER ASSY, THREE ROW, LEFT		1	1
039	4314G298	CONDENSER ASSY, THREE ROW, RIGHT		1	1
040	43146715	VALVE, CHECKED	2	3	3
041	43146721	VALVE, CHECK	1	1	1
042	37547751	VALVE, CHECKED	3	4	4
043	43146676	JOINT,CHECK	3	3	3
044	43149317	RUBBER, SUPPORTER, PIPE	2	2	2
045	43149338	RUBBER, SUPPORTER, PIPE	1	2	2
046	43149318	RUBBER, SUPPORTER, PIPE	3	5	5
047	43149319	RUBBER, SUPPORTER, PIPE	1	5	5
048	43149339	RUBBER, SUPPORTER, PIPE	2		
049	43149358	RUBBER, SOPPORTER, PIPE		3	3
050	43149320	RUBBER, SUPPORTER, PIPE	2	3	3

Ref. No.	Part No.	Description	MMY-MAP		
			0724HT9UL	0964HT9UL	1144HT9UL
051	43149321	RUBBER, SUPPORTER, PIPE	1	2	2
052	4311M671	MARK, TOSHIBA CARRIER	1	1	1
053	43163063	HOLDER, SENSOR, TO	1	1	1
054	4310A016	CABINET, SIDE, UP		2	2
055	4310A011	PANEL	1	1	1
056	43149391	SENSOR ASSY, HIGH PRESSURE	1	1	1
057	43149392	SENSOR ASSY, LOW PRESSURE	1	1	1
058	43100481	CABINET ASSY, SIDE, LEFT	1	1	1
059	43100482	CABINET ASSY, SIDE, RIGHT	1	1	1
060	43100483	CABINET ASSY, FRONT, DOWN	1		
061	43100484	CABINET ASSY, BACK, DOWN	1		
062	43100485	CABINET ASSY, FRONT, DOWN		1	1
063	43100486	CABINET ASSY, BACK, DOWN		1	1
064	43197175	NUT, FLANGE	1	1	1
065	43197176	WASHER	1	1	1
066	43049683	BAND	4	5	5
067	43149323	RUBBER, SUPPORTER, PIPE	2	1	1
068	43149324	RUBBER, CUSHION	6	9	9
069	43147195	BONNET, 1/2 IN	1	1	1
070	43047401	BONNET, 3/8 IN	1	1	1
072	43148220	PLUG, FUSIBLE	2	2	2
073	44246235	TUBE, CAPILLARY, BYPASS	1	1	1
074	44246236	TUBE, CAPILLARY, BYPASS, 1.0X2.0X2000L	1	1	1
075	44246239	TUBE, CAPILLARY, ID 1.2	1	1	1
076	43019904	HOLDER, SENSOR (TS)	9	12	12
077	43197184	BOLT, COMPRESSOR	6	9	9
078	43149325	BAND, FIX	5	9	9
079	43149388	RUBBER, SUPPORTER, PIPE		1	1
080	431S8213	OWNER'S MANUAL	1	1	1
081	4314Q093	STRAINER	1		
082	4314Q094	STRAINER		2	2
083	4314Q054	STRAINER	5	6	6
084	4314Q055	STRAINER	1	1	1
085	4314Q056	STRAINER	2	1	1
086	4314Q057	STRAINER	1	1	1
087	4314Q095	STRAINER		2	2
088	4314Q096	STRAINER		1	1
089	43162061	GUARD, WIRE	1		
090	43162062	GUARD, WIRE		1	1
091	4310A015	PLATE, PROTECTOR, SIDE	2	2	2
092	4310A017	PLATE, PROTECTOR		1	1
093	4310A018	PLATE, PROTECTOR	1		

SMMS-i INV SERVICE PARTS LIST
MMY-MAP0724HTUL-INV

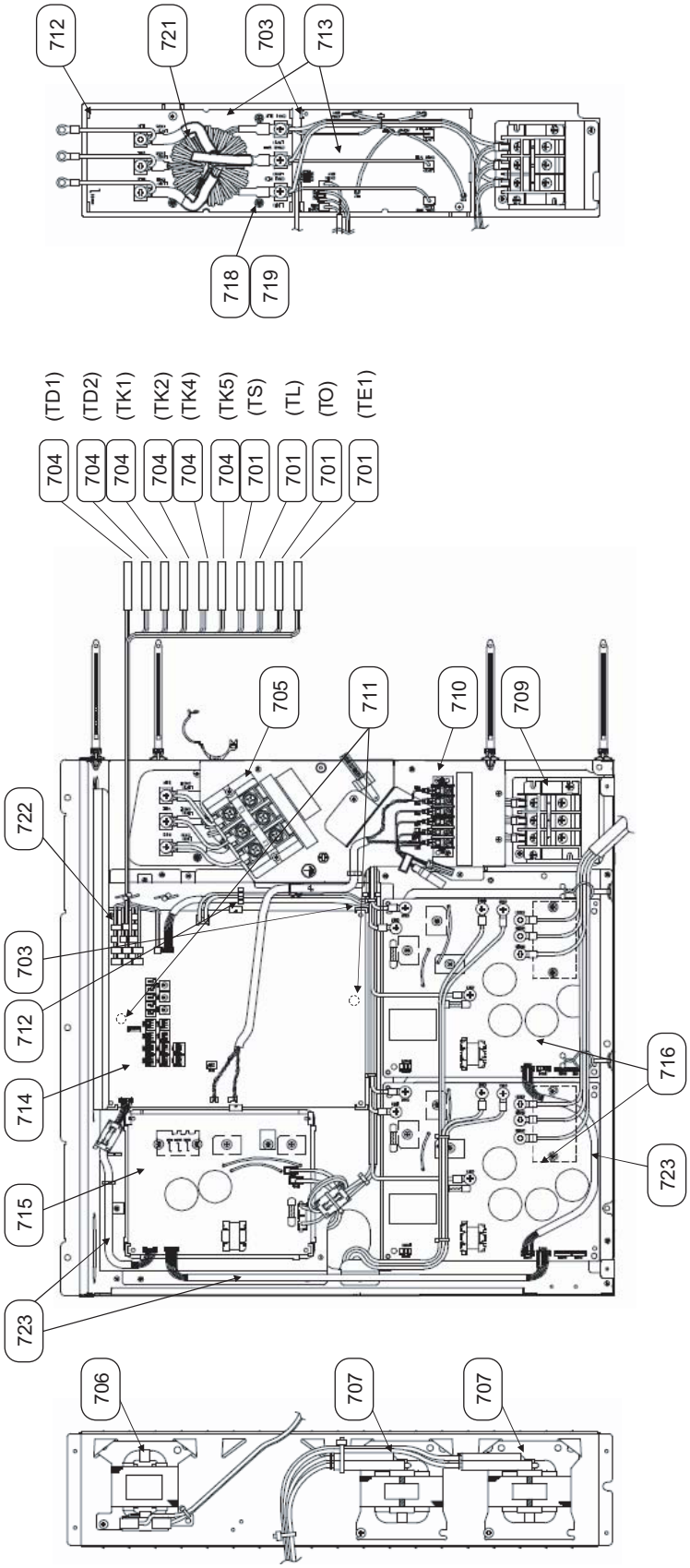

SMMS-i INV SERVICE PARTS LIST
MMY-MAP0964HT9UL-INV, MMY-MAP1144HT9UL-INV

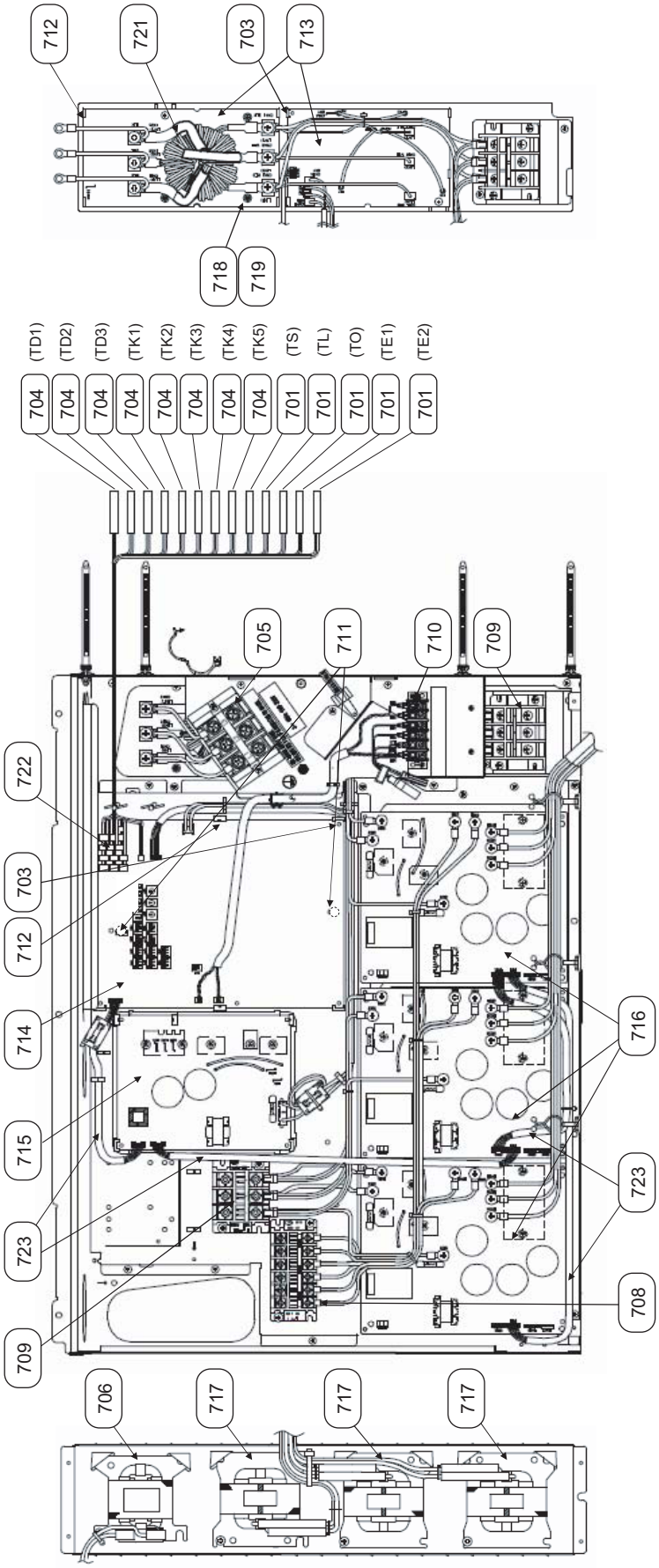

Ref. No.	Part No.	Description	MMY-MAP		
			0724HT9UL-INV	0964HT9UL-INV	1144HT9UL-INV
701	43050425	SENSOR ASSY, SERVICE	4	5	5
703	43063248	SUPPORTER, ASSY	2	2	2
704	43150315	SENSOR,TD (F6)	6	8	8
705	43160623	TERMINAL BLOCK, 3P, 100A (Power supply terminal block)	1	1	1
706	43158228	REACTOR (Reactor (for fan))	1	1	1
707	43158225	REACTOR (Reactor (for Compressor))	2		
708	43160617	TERMINAL, 6P (Relay terminal block for reactor)		1	1
709	43160609	TERMINAL BLOCK, 3P, 60A (Relay terminal block for power supply)	1	2	2
710	43160583	TERMINAL, 6P (Communication terminal block)	1	1	1
711	43069524	SUPORT, SPACER	2	2	2
712	43182011	SPACER (EDGE)	11	11	11
713	4316V453	PC BOARD ASSY, NOISE FILTER, MCC-1608 (Noise Filter P.C. board)	1	1	1
714	4316V450	PC BOARD ASSY, INTERFACE, MCC-1606 (Interface P.C. board)	1	1	1
715	4316V452	PC BOARD ASSY, FAN IPDU, MCC-1610 (Inverter P.C. board for fan)	1	1	1
716	4316V451	PC BOARD ASSY, A3IPDU, MCC-1595 (Inverter P.C. board for Compressor)	2	3	3
717	43158226	REACTOR (Reactor (for Compressor))		3	3
718	43282001	BUSHING	3	3	3
719	43183020	COLLAR	3	3	3
721	43155224	FILTER, LINE (Line filter)	1	1	1
722	43160618	CONNECTOR ASSY	4	5	5
723	43160619	WIRE ASSY	1	1	1

WARNINGS ON REFRIGERANT LEAKAGE

Check of Concentration Limit

The room in which the air conditioner is to be installed requires a design that in the event of refrigerant gas leaking out, its concentration will not exceed a set limit.
The refrigerant R410A which is used in the air conditioner is safe, without the toxicity or combustibility of ammonia, and is not restricted by laws to be imposed which protect the ozone layer. However, since it contains more than air, it poses the risk of suffocation if its concentration should rise excessively. Suffocation from leakage of R410A is almost non-existent. With the recent increase in the number of high concentration buildings, however, the installation of multi air conditioner systems is on the increase because of the need for effective use of floor space, individual control, energy conservation by curtailing heat and carrying power etc.
Most importantly, the multi air conditioner system is able to replenish a large amount of refrigerant compared with conventional individual air conditioners. If a single unit of the multi conditioner system is to be installed in a small room, select a suitable model and installation procedure so that if the refrigerant accidentally leaks out, its concentration does not reach the limit (and in the event of an emergency, measures can be made before injury can occur).
In a room where the concentration may exceed the limit, create an opening with adjacent rooms, or install mechanical ventilation combined with a gas leak detection device.
The concentration is as given below.

$$\frac{\text{Total amount of refrigerant (lbs (kg))}}{\text{Min. volume of the indoor unit installed room (ft}^3\text{ (m}^3\text{))}} \leq \text{Concentration limit (lbs/ft}^3\text{ (kg/m}^3\text{))}$$

Concentration limit
Compliance to the local applicable regulations and standards for the concentration limit is required.

NOTE 1 :
If there are 2 or more refrigerating systems in a single refrigerating device, the amounts of refrigerant should be as charged in each independent device.

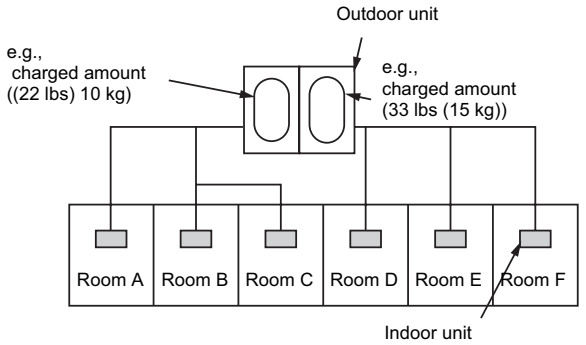

For the amount of charge in this example:
The possible amount of leaked refrigerant gas in rooms A, B and C is 22 lbs (10 kg).
The possible amount of leaked refrigerant gas in rooms D, E and F is 33 lbs (15 kg).

Important

NOTE 2 :
The standards for minimum room volume are as follows.

(1) No partition (shaded portion)

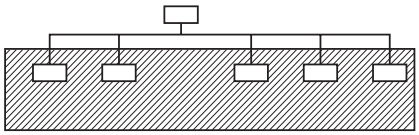

(2) When there is an effective opening with the adjacent room for ventilation of leaking refrigerant gas (opening without a door, or an opening 0.15 % or larger than the respective floor spaces at the top or bottom of the door).

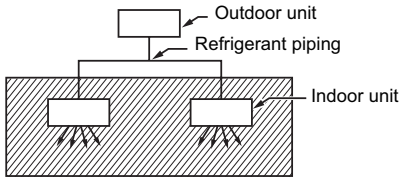

(3) If an indoor unit is installed in each partitioned room and the refrigerant piping is interconnected, the smallest room of course becomes the object. But when a mechanical ventilation is installed interlocked with a gas leakage detector in the smallest room where the density limit is exceeded, the volume of the next smallest room becomes the object.

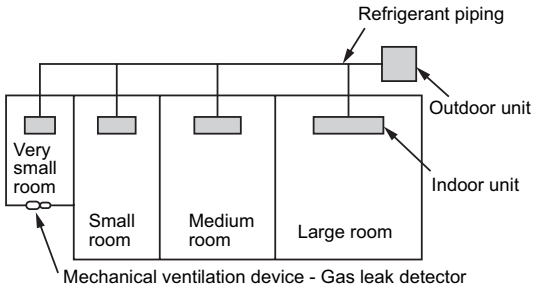

TOSHIBA CARRIER CORPORATION
23-17, TAKANAWAN,3 CHOME,MINATOKU TOKYO, 108-0075, JAPAN
Copyright © 1999 to 2012 TOSHIBA CARRIER CORPORATION, ALL Rights Reserved.

2nd publication in Mar.2012 ; File No.A10-020-1,REVISED EDITION 1
1st publication in Mar.2011 ; File No. A10-020

Specifications subject to change without notice.